Mason Creek Utility District, Harris County, Texas

NOTICE OF MEETING

NOTICE IS HEREBY GIVEN that the Board of Directors of Mason Creek Utility District (District) will hold a meeting, open to the public, on **September 16, 2020** beginning at 7:30 P.M. at the District's office at 847 Dominion, Katy, Texas 77450, where one or more Directors will be present. Pursuant to the disaster declaration and suspension of certain laws by the Governor of Texas, any Director or other person may participate in the meeting via telephone (with two-way audio) by calling a public, toll-free number (800-719-8139; enter conference code 447079 when prompted). Also, an electronic copy of any agenda packet will be made available on the internet at www.mcud.com/meeting-info/ (scroll to and click on link for "Agenda Packet"). Alternative means of communicating with District Directors include: (i) email addressed to "directors@mcud.com," (ii) mail, phone or fax to District Directors at 847 Dominion, Katy, Texas 77450, phone 281-578-7272, fax 281-578-1419. The subjects of the meeting are as follows:

1. **Notices & Minutes.** Notice of this meeting (including report) and minutes of previous meetings.
2. **Delinquencies, Etc.** Utility and tax accounts, connections and re-connections, billing, charges, inquiries, violations of regulations, collections, payout agreements, service terminations, including hearing(s) related to same, litigation, etc.
3. **Bookkeeping, Funds Etc.,** including: (i) expenses, funds, bills, checks, payments and audits; (ii) investments (report, policy, etc.); (iii) depositories, related agreements, collateral, etc.; (iv) budget, amendments, etc.; (v) bookkeeping report; and (vi) related matters.
4. **Audits, Financial Reports, Management Letters, Etc.,** including engagement of auditor for FY 2020 and related matters.
5. **Bills, Etc.** Matters related to expenses, bills, invoices, checks, payments, payment options, contracts, etc.
6. **Taxes,** including assessments, collections, payout agreements, delinquencies, exemptions, appraisal rolls and tax rolls, tax rates, notices, hearings, proceeds, expenditures, banking arrangements (and agreements), penalties, assessor/collector, delinquent attorney and other tax matters including "true up" and prorated taxes (fire station), developed district status, proposed debt service/O&M tax rates, calendar, publication, levy, etc.
7. **Bonds, Notes, Etc.** for water, sewer, drainage and other purposes, including proceeds; applications and approvals; engineering, financial and other services, bond insurance; and related matters, including: (i) Preliminary Official Statement for Sale of District's $1,485,000 Unlimited Tax Refunding Bonds, Series 2020 ("Refunding Bonds"); (ii) Bond Order Authorizing Issuance of the Refunding Bonds; An Escrow Agreement; A Bond Purchase Agreement; A Paying Agent/Registrar Agreement; A DTC Agreement; and Other Matters Related Thereto; (iii) Order Adopting Procedures and Standards of City of Houston; (iv) Engage Special Tax Counsel; provide for Underwriter's Counsel; (v) Engage/Approve Underwriter for Preparation of Offering Statement in Connection with Sale of District's Refunding Bonds, and establish sale parameters for the Refunding Bonds; (vi) Resolution Appointing Authorized Representative and Alternate Authorized Representative to Act on Behalf of the Board in Connection with the Sale of the Refunding Bonds; (vii) Attorney General's Bond Transcript Fee; (viii) Such Other Actions as Necessary to Effect the Issuance, Sale and Delivery of the Refunding Bonds.
8. **Water Supply, Contracts, Etc.** including agreements with Green Trails MUD, HCMUD#81, City of Houston (strategic partnership and groundwater reduction, water rates, use of surface water and coordination with nearby districts) and other entities.
9. **Engineering, Projects, Etc.**, including: (i) smart water meter system, electrical improvements at Galleon Oaks Water Plant (including bids, advertisement, award of contract, protest, insurance, contract documents and related matters), lift stations, inspections, force main and sewer repair/rehab, generator, electrical modifications, pool building and equipment reconstruction (plane crash), and other projects, (ii) reports, studies, designs, estimates, permits, approvals, bids, contracts, bonds, insurance, payments, change orders for the foregoing, and (iii) related matters.
10. **Energy, Streetlights, Etc**. Matters relating to energy or electricity, power pool, contracts, streetlights, disclosures, audits, etc.
11. **Drainage, Detention, Etc**. Drainage, detention, flood control, regulations, HCFCD/County/USACE studies and projects, Hurricane Harvey, Buffalo Bayou watershed (including Mason Creek and other tributaries), Addicks & Barker Reservoirs and related matters.
12. **STP's**. Regional sewage treatment plants (WMMUD and Cinco Regional STP's), use of effluent, contracts, costs and related matters.
13. **Recreational Facilities, Etc.,** including Mason Creek Community Center (buildings, pools, tennis courts, etc.), parks, trails and sidewalks and other recreational facilities (inside or outside the District); also: (i) permits, swim team, contracts, rights of way/land, neighbors/owners, operation, maintenance, promotion, inspection, repairs/replacements, improvements, supplies, equipment, insurance, open house, events, etc.; (ii) rates, rules, regulations, fees, users, events; (iii) Sweetwater Pool work; (iv) plane crash; and (iv) related matters.
14. **Operations & System Matters, Development, Etc.,** including: (i) operator activities and projects, including valve project and meter project; (ii) new or changed connections, applications for utility information or service, agreements, reimbursements, subdivision and other development matters (including facilities, costs, reimbursements, plats, easements, etc. for: Tiger Park/KTown Plaza tract on Westgreen Blvd., south of Mason Creek; child care center on Kingsland Blvd. west of MCCC; and other properties); (iv) system repairs, replacements, rehabilitations, extensions, alterations and relocations; (v) procurement of goods and services; (vi) TCEQ and City regulations, drinking water quality and reports, emergency operations, inspections, water conservation, drought contingencies, etc.; (vii) mutual aid and critical facilities; (viii) vehicles and equipment; (ix) inflow, infiltration, connections, grease traps, sampling, plumbing and other regulations; (x) fees and charges (including increases); (xi) rate order, including water/sewer rate increases; (xii) fire and emergency services and (xiii) related matters.
15. **Administrative Matters**, including: (a) office facilities; (b) repairs and improvements; (c) procurement of good and services; (d) supplies and equipment; (e) staffing, hiring, pay, benefits, etc.; (f) security and cybersecurity training, including costs and fees of office; (g) officers and employees, including duties, pay, benefits, holidays/vacations, etc.; (h) utility billing, etc.; (i) disposition of assets, claims, settlements, etc.; (j) District policies, including records management, conflicts, arbitrage, audits, etc.; (k) regulations (water, sewer, drainage, solid waste, recreation, administrative, etc.) and rate order; (l) elections, (m) insurance, renewals, claims, etc.; (n) communications, website, newsletters, alert system, etc. and (o) related matters.
16. **Inquiries; Next Meeting**. Inquiries and matters relating to the next meeting or items to be placed on the agenda.

IMPORTANT: (1) Each subject listed above includes discussion, consideration, action, etc. (2) Subjects may be taken up in the order listed or in another order and may be taken up more than once during the meeting. (3) If a quorum is not present, those present may form an ad hoc committee to discuss, consider and act upon the subjects listed above. (4) Each subject listed above includes an executive or closed session to the extent allowed by: (i) Section 551.071, Texas Government Code for attorney consultations to seek advice about pending or contemplated litigation or a settlement offer, or a matter in which the duty of the attorney to the governmental body under the Texas Disciplinary Rules of Professional Conduct of the State Bar of Texas clearly conflicts with Chapter 551, Texas Government Code; or (ii) Section 551.072, Texas Government Code for deliberating purchase, exchange, lease, or value of real property; or (iii) Section 551.074, Texas Government Code to deliberate the appointment, employment, evaluation, reassignment, duties, discipline, or dismissal of a public officer or employee or to hear a complaint or charge against such officer or employee. (5) IF YOU HAVE A DISABILITY REQUIRING SPECIAL ARRANGEMENTS AT THE MEETING, PLEASE CONTACT THE DISTRICT'S OFFICE AT 281-578-7272 BEFORE THE MEETING. REASONABLE ACCOMMODATIONS WILL BE MADE TO ASSIST YOUR PARTICIPATION IN THE MEETING. THE MEETING PLACE MENTIONED ABOVE IS ACCESSIBLE BY WHEELCHAIRS.

Date issued: 9-9-2020 Signed: Susan Saccomen, *Susan Saccomen, MCUD Office Mgr.*

MUNICIPAL ACCOUNTS
& CONSULTING, L.P.

Mason Creek
Utility District

Bookkeeper's Report

September 16, 2020

1281 Brittmoore Road • Houston, Texas 77043 • Phone: 713.623.4539 • Fax: 713.629.6859

Mason Creek Utility District

Account Balances

As of September 16, 2020

Financial Institution (Acct Number)	Issue Date	Maturity Date	Interest Rate	Account Balance	Notes
Fund: Operating					
Certificates of Deposit					
ALLEGIANCE BANK (XXXX0243)	03/08/2019	09/08/2020	2.25 %	243,073.56	
BBVA USA-PREMIER (XXXX9123)	09/09/2019	09/08/2020	2.05 %	508,110.13	
PROSPERITY BANK (XXXX8605)	10/08/2019	10/07/2020	2.00 %	1,076,587.73	
BBVA USA-PREMIER (XXXX1422)	12/16/2019	12/15/2020	1.47 %	1,250,000.00	
PROSPERITY BANK (XXXX9628)	06/19/2020	06/19/2021	0.70 %	401,130.06	
PROSPERITY BANK (XXXX9631)	06/19/2020	06/19/2021	0.70 %	427,872.04	
ALLEGIANCE BANK (XXXX4520)	08/17/2020	08/17/2021	0.50 %	275,000.00	
ALLEGIANCE BANK (XXXX4868)	08/24/2020	08/24/2021	0.50 %	1,000,000.00	
BANCORPSOUTH (XXXX6212)	12/11/2019	12/11/2021	2.00 %	225,000.00	
Money Market Funds					
PROSPERITY BANK (XXXX1586)	09/05/2012		0.45 %	982,755.82	Surplus Maint Tax
BBVA USA-PREMIER (XXXX1192)	04/21/2016		0.10 %	1,253,176.83	Surplus Maint Tax
Checking Account(s)					
BBVA USA-CHECKING (XXXX1842)			0.10 %	248,760.29	Checking Account
		Totals for Operating Fund:		**$7,891,466.46**	
Fund: Capital Projects					
Money Market Funds					
BBVA USA-PREMIER (XXXX0525)	03/09/2020		0.10 %	2,227,391.76	
Checking Account(s)					
BBVA USA-CHECKING (XXXX9691)			0.10 %	300.00	Checking Account
		Totals for Capital Projects Fund:		**$2,227,691.76**	
Fund: Debt Service					
Money Market Funds					
BBVA USA-DEBT (XXXX0943)	04/21/2016		0.10 %	352,675.05	
		Totals for Debt Service Fund:		**$352,675.05**	
Fund: Tax					
Money Market Funds					
COMERICA BANK - TEXAS (XXXX1698)	07/01/2011		0.15 %	52,335.66	Tax Collections
Checking Account(s)					
COMERICA BANK - TEXAS (XXXX8135)			0.00 %	1,237.59	Checking Account
		Totals for Tax Fund:		**$53,573.25**	
		Grand total for Mason Creek Utility District:		**$10,525,406.52**	

Mason Creek UD

Capital Projects Fund Breakdown

September 16, 2020

Net Proceeds for All Bond Issues

Receipts	
Series 2020 - Bond Proceeds	$2,650,000.00
Series 2020 - Interest Earnings	1,610.70
Disbursements	
Series 2020 - Disbursements (Attached)	(423,918.94)
Total Cash Balance	$2,227,691.76

Balances by Account

Checking - BBVA Bank (9691)	$300.00
Series 2020 MM - BBVA (0525)	2,227,391.76
Total Cash Balance	$2,227,691.76

Balances by Bond Series

Series 2020 - Bond Proceeds	$2,227,691.76
Total Cash Balance	$2,227,691.76

Remaining Costs/Surplus By Bond Series

Series 2020 - Remaining Costs	$2,188,205.50
Total Amount in Remaining Costs	$2,188,205.50
Total Surplus & Interest Balance	$39,486.26
Total Remaining Costs/Surplus	$2,227,691.76

MASON CREEK UD
$2,650,000 SERIES 2020
COST COMPARISON

CONSTRUCTION COSTS	USE OF PROCEEDS	ACTUAL COSTS	REMAINING COSTS	VARIANCE (OVER)/UNDER
Brondesbury Drive Lift Station Conversion	750,000.00	49,300.00	700,700.00	0.00
Rennie Drive Lift Station Conversion	700,000.00	45,750.00	654,250.00	0.00
Ellingham Drive Sanitary Sewer Rehabilitation	550,000.00	0.00	550,000.00	0.00
Contingencies	200,000.00	86,744.50	113,255.50	0.00
Engineering	170,000.00	0.00	170,000.00	0.00
TOTAL CONSTRUCTION COSTS	2,370,000.00	181,794.50	2,188,205.50	0.00
NON-CONSTRUCTION COSTS				
Legal Fees	68,000.00	68,000.00	0.00	0.00
Financial Advisor	46,375.00	46,375.00	0.00	0.00
Bond Discount	79,500.00	33,650.85	0.00	45,849.15
Administrative Expense & Issuance Costs	26,850.00	34,823.59	0.00	(7,973.59)
TCEQ Bond Issuance Fee	6,625.00	6,625.00	0.00	0.00
Attorney General	2,650.00	2,650.00	0.00	0.00
Bond Application Report	50,000.00	50,000.00	0.00	0.00
TOTAL NON-CONSTRUCTION COSTS	280,000.00	242,124.44	0.00	37,875.56
TOTAL BOND ISSUE REQUIREMENT	2,650,000.00	423,918.94	2,188,205.50	37,875.56
			Interest Earned	1,610.70
			Total Remaining Costs & Interest	2,189,816.20
			Total Surplus & Interest	39,486.26

Mason Creek - GOF

Actual vs. Budget Comparison

August 2020

		August 2020			July 2020 - August 2020			Annual
		Actual	Budget	Over/(Under)	Actual	Budget	Over/(Under)	Budget
Revenues								
14110	Water - Customer Service	119,688	140,000	(20,312)	248,002	280,000	(31,998)	1,294,142
14112	Ground Water Reduction Program	32,165	40,000	(7,835)	68,635	80,000	(11,365)	345,300
14125	TCEQ Assessment Fees	1,121	1,023	98	2,326	2,047	280	12,280
14140	Transfer Fees	575	517	58	1,375	1,033	342	6,200
14150	Tap Connections	0	167	(167)	525	333	192	2,000
14151	Fire Tap Connection Fees	756	758	(2)	1,513	1,517	(4)	9,100
14210	Sewer - Customer Service Fee	104,601	130,000	(25,399)	216,850	250,000	(33,150)	1,161,868
14310	Penalties & Interest	(47)	2,083	(2,131)	(96)	4,167	(4,262)	25,000
14330	Miscellaneous Income	0	417	(417)	0	833	(833)	5,000
14332	Recycle Bin Sales	60	83	(23)	180	167	13	1,000
14333	Reclaimed Water Revenue-Cinco	417	417	0	834	833	0	5,000
14334	Insurance Income	66,900	0	66,900	66,900	0	66,900	2,500
14350	Maintenance Tax Collections	2,544	2,500	44	140,875	140,500	375	2,221,200
14370	Interest Earned on Temp. Invest	25,556	11,772	13,784	32,522	23,543	8,979	141,260
14375	COH Sales Tax Revenues	20,883	20,275	608	33,154	40,550	(7,396)	243,300
14380	Interest on Checking Accounts	42	54	(12)	72	108	(36)	650
14900	Use of Prior Yr Reserves	0	0	0	0	0	0	748,382
Total Revenues		375,261	350,066	25,195	813,667	825,632	(11,965)	6,224,182
Expenditures								
16011	Solid Waste Collection	54,826	55,833	(1,008)	109,651	111,667	(2,015)	670,000
16012	Garbage- Dumpster	1,771	1,167	605	2,998	2,333	665	14,000
16013	Recycle Bins & Carts	0	0	0	0	0	0	3,500
16120	Ground Water Fee	0	45,000	(45,000)	7,545	90,000	(82,455)	400,932
16130	Maintenance & Repairs	76,379	83,333	(6,954)	148,258	166,667	(18,408)	1,000,000
16130-1	Meter Change Out Program	949	8,333	(7,384)	949	16,667	(15,718)	100,000
16132	Valve Replacements	0	16,667	(16,667)	0	33,333	(33,333)	200,000
16135	Surface Water Projects	0	0	0	0	0	0	100,000
16140	Chemicals-Fuel-Gasoline	6,093	2,417	3,676	9,301	4,833	4,468	29,000
16160	Utilities	0	14,167	(14,167)	0	28,333	(28,333)	170,000
16162	Utilities-Streetlights	0	8,950	(8,950)	0	17,900	(17,900)	107,400
16220	Purchase Sewer Service	14,199	28,533	(14,334)	52,199	57,067	(4,868)	342,400
16220-1	Capital Outlay-WMM STP	0	8,333	(8,333)	667	16,667	(15,999)	100,000
16220-2	Capital Outlay - Cinco STP	0	0	0	0	0	0	100,000
16270	Rents & Leases	0	417	(417)	0	833	(833)	5,000
16330	Legal Fees	0	1,667	(1,667)	0	3,333	(3,333)	20,000
16340	Auditing Fees	0	0	0	0	0	0	18,000
16350	Engineering Fees	8,625	7,500	1,125	19,777	15,000	4,777	90,000
16365	Directors Fees	2,250	1,950	300	4,650	3,900	750	23,400
16366	Directors Expenses & Conference	(750)	0	(750)	(581)	170	(751)	4,000
16380	Permit Expense	0	0	0	0	0	0	7,000
16385	TCEQ Assessment Fees	0	0	0	0	0	0	12,280
16390	Telephone Expense	1,540	2,083	(544)	2,873	4,167	(1,293)	25,000
16420	Billing & Collecting	0	3,917	(3,917)	2,227	7,833	(5,606)	47,000
16430	Bookkeeping Fees	5,401	3,750	1,651	9,690	7,500	2,190	45,000
16435	Sales Tax Monitoring	0	0	0	0	0	0	2,000
16450	Legal Notices & Other Publ.	0	175	(175)	166	350	(184)	2,100
16460	Office Supplies & Services	3,595	2,500	1,095	7,061	5,000	2,061	30,000
16460-1	Office Furniture & Fixtures	0	0	0	0	0	0	5,000
16465	Bank Service Charges	33	1,083	(1,050)	466	2,167	(1,701)	13,000
16467	ACH & Credit Card Fees	1,118	1,083	35	2,100	2,167	(67)	13,000
16530	Insurance & Surety Bond	289	300	(11)	289	300	(11)	77,000

Mason Creek - GOF

Actual vs. Budget Comparison

August 2020

		August 2020			July 2020 - August 2020			Annual
		Actual	Budget	Over/(Under)	Actual	Budget	Over/(Under)	Budget
Expenditures								
16550	Security Expenses	0	1,833	(1,833)	134	3,667	(3,532)	22,000
16560	Miscellaneous Expense	0	2,096	(2,096)	3,435	4,192	(757)	25,150
16563	Sales Tax Expense	0	0	0	0	0	0	120
1660001	Salaries- Employees	36,611	38,892	(2,281)	73,632	77,783	(4,152)	466,700
1660002	Payroll Tax Expense	3,030	3,333	(303)	6,046	6,667	(621)	40,000
1661001	Health Insurance	11,507	11,250	257	24,865	22,500	2,365	135,000
1661002	Reimbursements-Employee	0	1,667	(1,667)	676	3,333	(2,658)	20,000
16611	Mileage Reimbursement-Employee	400	475	(75)	800	950	(150)	5,700
16620	Pension Costs	0	0	0	0	0	0	28,000
17100	Capital Outlay	35,384	35,000	384	60,804	60,000	804	150,000
17100-5	Capital - Brondesbury LS Rehab	0	0	0	0	0	0	1,000,000
17100-6	Capital- Rennie LS Rehab	0	0	0	0	0	0	100,000
17100-7	Capital - SS Lines - Repairs	0	0	0	0	0	0	250,000
Total Expenditures		263,248	393,704	(130,456)	550,678	777,278	(226,600)	6,018,682
Other Revenues								
14385	MCCC-Room Rental Fee	0	2,917	(2,917)	0	5,833	(5,833)	35,000
14390	MCCC-Pool Usage Fees	0	2,083	(2,083)	0	4,167	(4,167)	25,000
14395	MCCC-Tennis Usage Fees	0	833	(833)	775	1,667	(892)	10,000
Total Other Revenues		0	5,833	(5,833)	775	11,667	(10,892)	70,000
Other Expenditures								
16020	MCCC-Pool Contracted Serv.	14,348	6,167	8,181	27,638	12,333	15,305	74,000
16131	MCCC-Maint. & Repairs	21,957	8,333	13,623	27,881	16,667	11,214	100,000
16131-1	Club House Repairs	0	0	0	0	0	0	25,000
16131-3	MCCC Repairs - Pool	0	1,667	(1,667)	0	3,333	(3,333)	20,000
16161	MCCC_Utilities	0	1,250	(1,250)	0	2,500	(2,500)	15,000
16391	MCCC-Telephone	0	283	(283)	0	567	(567)	3,400
16461	MCCC-Bldg. Supplies & Services	600	1,250	(650)	1,200	2,500	(1,300)	15,000
16466	Pool Tags & Team Supplies	0	208	(208)	0	417	(417)	2,500
16561	MCCC-Miscellaneous Exp.	0	883	(883)	0	1,767	(1,767)	10,600
16650	MCCC-Plane Crash	0	0	0	93	0	93	0
16700	MCCC Capital Outlay	0	0	0	0	0	0	10,000
Total Other Expenditures		36,905	20,042	16,863	56,812	40,083	16,729	275,500
Excess Revenues (Expenditures)		$75,109	($57,847)	$132,955	$206,952	$19,937	$187,015	$0

Mason Creek - GOF

Balance Sheet

As of August 31, 2020

	Aug 31, 20	
ASSETS		
Current Assets		
Checking/Savings		
11100 · Cash in Bank		396,542
11200 · Money Market Accounts		
1130001 · Money Market - Prosperity	982,756	
1130003 · Money Market - BBVA	1,253,177	
Total 11200 · Money Market Accounts		2,235,933
11300 · Certificates of Deposit		5,406,774
Total Checking/Savings		8,039,248
Other Current Assets		
11500 · Accounts Receivable		263,822
11520 · Taxes Receivable		59,531
11580 · Accrued Interest		72,584
11720 · Due from COH -Sales Tax Rebate		48,154
11740 · Due From Construction		1,485
11750 · Due From Tax Account		139,639
11783 · Advance for STP West Memorial		40,832
11784 · Advance Cinco STP		30,000
Total Other Current Assets		656,046
Total Current Assets		8,695,295
TOTAL ASSETS		8,695,295
LIABILITIES & EQUITY		
Liabilities		
Current Liabilities		
Accounts Payable		
12000 · Accounts Payable		142,433
Total Accounts Payable		142,433
Other Current Liabilities		
12610 · Customer Meter Deposits		51,801
12615 · MCCC Tennis Key Deposit		10,662
12620 · Deposits - Other		500
12700 · State Assessment Fees		5,124
12770 · Unclaimed Property		958
12790 · Deferred Tax Inflows		59,531
Total Other Current Liabilities		128,576
Total Current Liabilities		271,009
Total Liabilities		271,009
Equity		
13010 · Unassigned Fund Balance		8,217,335
Net Income		206,952
Total Equity		8,424,286
TOTAL LIABILITIES & EQUITY		8,695,295

Mason Creek Utility District

District Debt Service Payments

09/01/2020 - 09/01/2021

Paying Agent	Series	Date Due	Date Paid	Principal	Interest	Total Due
Debt Service Payment Due 02/01/2021						
Wells Fargo Bank, NA	2011 - WS&D	02/01/2021		0.00	28,337.50	28,337.50
UMB	2020 - WS&D	02/01/2021		0.00	26,550.00	26,550.00
			Total Due 02/01/2021	**0.00**	**54,887.50**	**54,887.50**
Debt Service Payment Due 08/01/2021						
Wells Fargo Bank, NA	2011 - WS&D	08/01/2021		110,000.00	28,337.50	138,337.50
UMB	2020 - WS&D	08/01/2021		50,000.00	26,550.00	76,550.00
			Total Due 08/01/2021	**160,000.00**	**54,887.50**	**214,887.50**
			District Total	**$160,000.00**	**$109,775.00**	**$269,775.00**

Mason Creek UD
Sales Tax Revenue History

Year	January	February	March	April	May	June	July	August	September	October	November	December	Total
2016	21,806	23,758	27,709	23,108	28,099	27,362	25,449	23,576	22,216	16,208	21,012	19,732	280,035
2017	21,968	20,592	21,562	23,340	24,447	23,000	20,735	21,305	22,891	22,875	23,536	23,186	269,437
2018	20,339	21,310	24,097	20,538	25,498	22,643	22,087	21,168	17,400	18,453	20,944	20,660	255,136
2019	16,779	18,537	19,468	23,973	22,607	21,874	25,471	22,379	17,969	19,826	18,020	21,510	248,412
2020	19,788	19,686	16,381	12,271	20,883								89,010
Total	**$185,612**	**$195,758**	**$214,428**	**$231,011**	**$246,088**	**$216,650**	**$216,575**	**$209,631**	**$204,514**	**$184,178**	**$194,910**	**$215,501**	**$2,514,855**

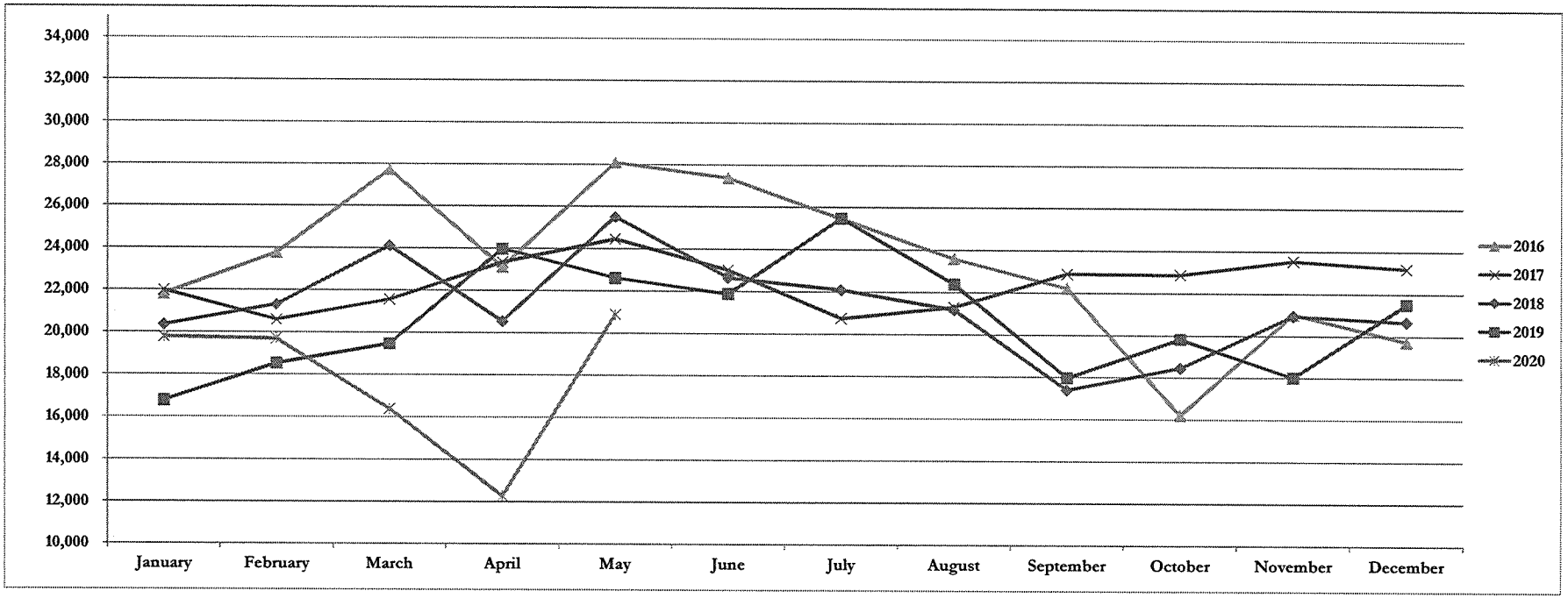

Agenda Packet--PAGE 010

Mason Creek UD

2021 AWBD Mid-Winter Conference

Friday, January 29 - Saturday, January 30, 2021

JW Marriott - Austin, TX

DIRECTOR		CONFERENCE REGISTRATION		ADVANCE	PRIOR CONFERENCE EXPENSES
Name	Attending	Online	Paid	Paid	Paid
Len Forsyth					
James (Trey) Hamblet					
Robert Wills					
John Cameron					
Brian Connolly					

Note: Register on-line www.awbd-tx.org (For log in assistance, contact Taylor Cavnar: tcavnar@awbd-tx.org)
This page only confirms registration for the conference, not hotel registrations.
All hotel reservations are the sole responsibility of each attendee.
Your conference registration confirmation will contain a housing reservation request web link.
The link will require the registration number from your conference registration before you can reserve a room.
All requests for an advance of funds must be sent via email to the bookkeeper within 30 days of conference.

REGISTRATION DATES:

Early Registration:	Begins	09/02/20	$310
Regular Registration:	Begins	10/01/20	$360
Late Registration:	Begins	12/17/20	$460

CANCELLATION POLICY:
All cancellations must be made in writing.
A $50.00 administrative fee is assessed for each conference registration cancelled on or before 12/16/2020.
There will be no refunds after 12/16/2020.

All registrations are non-transferable.

HOUSING INFORMATION:
Hotel reservations are only available to attendees who are registered with AWBD-TX for the Conference.
If you have questions, please call Taylor Cavnar or Sara Albright at (281) 350-7090.

Mason Creek Utility District
AMENDED FY 21 BUDGET
(Adopted, as amended,
August 12, 2020)

DISTRICT (EX. MCCC and Tax Funds)	Adopted Budget FY 2019	Adopted Budget FY 2020	Adopted Budget FY 2021	Budget Variance $ FY 2020-FY 2021	Budget Variance % FY 2020-FY 2021
Revenues					
14110 · Water - Customer Service	$1,235,650	$1,206,750	$1,294,142	87,392	7%
14112 · Ground Water Reduction Program	332,200	333,900	345,300	11,400	3%
14125 · TCEQ Assessment Fees	11,450	11,450	12,280	830	7%
14140 · Transfer Fees	5,540	5,200	6,200	1,000	19%
14150 · Tap Connections	2,060	2,000	2,000	0	0%
14151 · Fire Tap Connection Fees	8,600	9,100	9,100	0	0%
14210 · Sewer - Customer Service Fee	1,074,750	1,145,300	1,161,868	16,568	1%
14310 · Penalties & Interest	23,600	25,000	25,000	0	0%
14330 · Miscellaneous Income	0	5,000	5,000	0	0%
14332 · Recycle Bin Sales	1,100	1,100	1,000	(100)	-9%
14333 · Reclaimed Water Revenue - Cinco	2,040	3,000	5,000	2,000	67%
14350 · Maintenance Tax Collections -(Transfer from Tax Fund)	1,758,837	1,815,000	1,942,700	127,700	7%
14370 · Interest Earned on Temp. Invest	90,300	150,000	141,260	(8,740)	-6%
14375 · COH Sales Tax Revenues	295,250	234,650	243,300	8,650	4%
14380 · Interest on Checking Accounts	690	690	650	(40)	-6%
14334 · Insurance Income	0	0	2,500	2,500	100%
Total Revenues	4,842,067	4,948,140	5,197,300	249,160	5%
Expenditures-District					
16010 · District Operator Fees	347,750	0	0	0	0%
16011 · Solid Waste Collection	670,000	670,000	670,000	0	0%
16012 · Garbage- Dumpster	9,350	11,000	14,000	3,000	27%
16013 · Recycle Bins & Carts	0	3,500	3,500	0	0%
16120 · Ground Water Fee	319,400	340,432	400,932	60,500	18%
16130-1 · Meter Change Out Program	43,850	43,850	100,000	56,150	128%
16130 · Maintenance & Repairs	473,150	550,000	1,000,000	450,000	82%
16132 · Valve Replacements	200,000	200,000	200,000	0	0%
16135 · Surface Water Projects	100,000	100,000	100,000	0	0%
16140 · Chemicals-Fuel-Gasoline	36,100	22,500	29,000	6,500	29%
16160 · Utilities	196,670	156,800	170,000	13,200	8%
16162 · Utilities-Streetlights	133,320	107,400	107,400	0	0%
16220-1 · Capital Outlay-WMM STP	200,000	200,000	100,000	(100,000)	-50%
16220-2 · Capital Outlay - Cinco STP	150,000	150,000	100,000	(50,000)	-33%
16220 · Purchase Sewer Service	342,400	342,400	342,400	0	0%
16270 · Rents & Leases	4,660	4,660	5,000	340	7%
16300 · Professional					
16330 · Legal Fees	55,000	20,000	20,000	0	0%
16340 · Auditing Fees	16,500	17,250	18,000	750	4%
16350 · Engineering Fees	15,100	90,000	90,000	0	0%
16351 · Lobbying Expense ((Note 1)	0	0	0	0	0%
16365 · Directors Fees	18,450	23,400	23,400	0	0%
16366 · Directors Expenses & Conference	4,000	4,000	4,000	0	0%
16380 · Permit Expense	17,500	6,500	7,000	500	8%
16385 · TCEQ Assessment Fees	11,550	11,550	12,280	730	6%
16390 · Telephone Expense	20,600	25,000	25,000	0	0%
16420 · Billing & Collecting	42,300	44,000	47,000	3,000	7%
16430 · Bookkeeping Fees	41,600	42,500	45,000	2,500	6%
16435 · Sales Tax Monitoring	1,450	2,000	2,000	0	0%
16450 · Newspaper Notices Req. by Law (Sec. 140.0045, LGC)	1,400	2,100	2,100	0	0%
16460-1 · Office Furniture & Fixtures	0	5,000	5,000	0	0%
16460 · Office Supplies & Services	5,000	33,000	30,000	(3,000)	-9%
16465 · Bank Service Charges	450	740	13,000	12,260	1657%
16467 · ACH & Credit Card Fees	7,900	10,500	13,000	2,500	24%
16530 · Insurance & Surety Bond	71,300	71,300	77,000	5,700	8%
16550 · Security Expenses	18,300	18,300	22,000	3,700	20%
16560 · Miscellaneous Expense	25,150	25,150	25,150	0	0%
16563 · Sales Tax Expense	120	120	120	0	0%
16565 · Water Conservation&Water Wise	3,000	0	0	0	0%
16600 · Payroll Expenses					
1660001 · Salaries- Employees	248,250	466,700	466,700	0	0%
1660002 · Payroll Tax Expense	21,230	40,000	40,000	0	0%
16611 · Mileage Reimbursement-Employee	7,760	5,200	5,700	500	10%
16620 · Pension Costs	24,830	46,670	28,000	(18,670)	-40%
16610 · Employee Medical					
1661001 · Health Insurance	87,700	130,000	135,000	5,000	4%
1661002 · Reimbursements-Employee	12,000	20,000	20,000	0	0%
16500 · Tax Expenses					
46310 · Delinquent Attorney Fees	0	0	3,480	3,480	0%
46320 · HCAD Fees	0	0	14,300	14,300	0%
46340 · Assessor/Collector Fees	0	0	28,000	28,000	0%
46450 · Miscellaneous Expense	0	0	7,000	7,000	0%
Total 16500 · Tax Expenses					
17100 · Capital Outlay	150,000	150,000	150,000	0	0%
17100-4 · Capital - Admin Building Rehab	300,000	175,000	0	(175,000)	-100%
17100-5 · Capital - Brondesbury LS Rehab	0	1,000,000	1,000,000	0	0%
17100-6 · Capital- Rennie LS Rehab	0	100,000	100,000	0	0%
17100-7 · Capital - SS Lines - Repairs	0	250,000	250,000	0	0%
Total District Expenditures	4,455,090	5,738,522	6,071,462	332,940	5,405,582
Net Excess Revenues <Expenditures>	386,977	(790,382)	(874,161)	(83,779)	(706,603)
MCCC (Community Center) Fund					
MCCC Revenues					
14385 · MCCC-Room Rental Fee	50,600	35,000	35,000	0	0%
14390 · MCCC-Pool Usage Fees	25,850	25,000	25,000	0	0%
14395 · MCCC-Tennis Usage Fees	7,800	8,600	10,000	1,400	16%
Total MCCC Revenues	84,250	68,600	70,000	1,400	0
16000 · MCCC Expenditures					
16020 · MCCC-Pool Contracted Serv.	70,500	74,000	74,000	0	0%
16131-1 · Club House Repairs	100,000	50,000	25,000	(25,000)	-50%
16131-3 · MCCC Repairs - Pool	20,000	20,000	20,000	0	0%
16131 · MCCC-Maint. & Repairs	41,250	100,000	100,000	0	0%
16161 · MCCC_Utilities	22,330	15,000	15,000	0	0%
16391 · MCCC-Telephone	2,700	3,400	3,400	0	0%
16461 · MCCC-Bldg. Supplies & Services	21,100	2,000	15,000	13,000	650%
16466 · Pool Tags & Team Supplies	2,500	2,500	2,500	0	0%
16561 · MCCC-Miscellaneous Exp.	10,600	10,600	10,600	0	0%
16700 · MCCC Capital Outlay	12,000	20,000	10,000	(10,000)	-50%
Total MCCC Expenditures	302,980	297,500	275,500	(22,000)	319,500
Net MCCC Excess Expenditures	(218,730)	(228,900)	(205,500)	23,400	(252,300)
14900- Use of Prior Years Reserves	0	1,019,282	1,079,661	60,379	6%
Net District & MCCC Excess Revenues <Expenditures>	$168,247	$0	($0)	($0)	$60,379

Note 1: Expenditures for directly or indirectly influencing or attempting to influence the outcome of legislation for administrative action, as those terms are defined in Section 305.092, Government Code

Mason Creek Utility District
AMENDED FY 21 BUDGET
(Adopted, as amended,
August 12, 2020)

DISTRICT (EX. MCCC and Tax Funds)	Adopted Budget FY 2019	Adopted Budget FY 2020	Adopted Budget FY 2021	Budget Variance $ FY 2020-FY 2021	Budget Variance % FY 2020-FY 2021
		adopted 8-12-20, based on actuals			
TAX FUND					
Revenues					
Current & Prior Years Taxes	2,013,626	2,239,879	2,291,100	51,221	2%
Penalty & Interest	10,730	9,186	10,000	814	9%
Additional Collection Penalty	4,365	3,281	3,500	219	7%
Overpayments	3,425	7,678	5,000	(2,678)	-35%
Excess Escrow Distri/Sec 23.12	0	2,116	0	(2,116)	-100%
Special Inventory Tax/Overpayment	7,808	0	0	0	0%
Funds Pending Certification	8	(8)	0	8	-100%
Refund - due to adjustments	30,198	9,651	5,000	(4,651)	-48%
Unpaid Account	662	909	500	(409)	-45%
Substantial Error Penalty	88	0	0	0	0%
Rendition Penalty	300	168	0	(168)	-100%
Refund Rendition Penalty	58	0	0	0	0%
TOTAL REVENUES	2,071,268	2,272,860	2,315,100	42,241	(4)
Expenditures					
Atty's Fees, Delq. collection	4,193	4,069	520	(3,549)	-87%
CAD Quarterly Assessment	14,942	16,180	2,145	(14,035)	-87%
Newspaper Notices Req. by Law (Sec. 140.0045, LGC)	441	441	57	(384)	-87%
Refund - due to adjustments	32,646	21,685	25,000	3,315	15%
Refund - due to overpayments	3,332	7,627	5,000	(2,627)	-34%
Tax A/C Bond Premium	2,188	2,188	284	(1,904)	-87%
Transfer to Debt Service Fund (property tax revenue budgeted for debt service)	157,659	275,140	278,400	3,260	1%
Transfer to General Fund (property tax revenue budgeted for Maint. And Oper)	1,694,287	1,819,726	1,942,700	122,974	7%
Tax Assessor/Collector Fee	32,280	32,280	4,196	(28,084)	-87%
Unpaid Account	662	909	65	(844)	-93%
Rendition Penalty	12	0	0	0	0%
Rendition Penalty Refund	11	0	0	0	0%
Rendition Penalty CAD Portion	0	15	0	(15)	-100%
Computer Cost	0	35	5	(31)	-87%
Postage	1,555	1,704	221	(1,483)	-87%
Supplies	1,061	1,054	137	(918)	-87%
Audit Preparation	150	150	20	(131)	-87%
Additional Services BLI	325	325	42	(283)	-87%
Records Maintenance	120	120	16	(104)	-87%
Copies	527	484	65	(419)	-87%
Envelopes - Original Stmts	471	447	59	(389)	-87%
Notice to Purchaser	10	0	0	0	0%
Duplicate Statements	26	10	1	(9)	-87%
Supp/Corr/Name Chgs Envelopes	0	111	7	(104)	-94%
Envelopes - Feb Delinq Stmts	64	72	10	(62)	-86%
Envelopes - May Del Stmts	38	43	7	(36)	-85%
Tax Lien Transfers	0	50	0	(50)	-100%
Delinquent Report Assistance	155	0	0	0	0%
Exemption Assistance	150	150	20	(131)	-87%
SB 2 Compliance	0	100	13	(87)	-87%
TOTAL EXPENDITURES	$1,947,304	$2,185,114	$2,258,988	$73,873	($20)
Net Excess Revenues <Expenditures>	$123,964	$87,745	$56,112	($31,633)	$16

Total Amount (All Funds)

REVENUES (including"Use of Prior Years Reserves"and disregarding "Transfer to General Fund" from Tax Fund)

Total FY 2021 $6,719,361
Change from FY 2020 $ 225,479 or 4%

EXPENDITURES (disregarding "Transfer to General Fund" from Tax Fund)

Total FY 2021 $6,663,250
Change from FY 2020 $ 261,840 or 4%

APPENDIX TO AMENDED FY 2021 BUDGET: On the internet at MCUD.com, adopted by this reference and incorporated herein.

MASON CREEK U.D.

TAX ASSESSOR/COLLECTOR'S REPORT

8/31/2020

Taxes Receivable: 8/31/2019	$ 90,725.73	
Reserve for Uncollectables	(46,050.69)	
Adjustments	320.69	$ 44,995.73
Original 2019 Tax Levy	$ 2,082,610.24	
Adjustments	180,752.27	2,263,362.51
Total Taxes Receivable		**$ 2,308,358.24**
Prior Years Taxes Collected	$ 9,209.84	
2019 Taxes Collected (98.9%)	2,240,063.73	2,249,273.57
Taxes Receivable at: 8/31/2020		**$ 59,084.67**

2019 Receivables:

Debt Service	2,920.64
Maintenance	20,378.14

bob leared interests

11111 Katy Freeway, Suite 725
Houston, Texas 77079-2197

Phone: (713) 932-9011
Fax: (713) 932-1150

MASON CREEK U.D.

		Month of 8/2020	Fiscal to Date 7/01/2020 - 8/31/2020
Check With Your Bookeeper	**For Your Cash Balance**		
Receipts:			
Current & Prior Years Taxes		3,277.43	6,195.87
Penalty & Interest		763.99	1,233.12
Additional Collection Penalty		950.72	1,556.61
Overpayments			2.24
Refund - due to adjustments		1,045.15	1,757.91
Rendition Penalty		1.19	1.19
TOTAL RECEIPTS	**$**	**6,038.48**	**10,746.94**
Disbursements:			
Atty's Fees, Delq. collection			194.93
Refund - due to adjustments		712.76	1,251.39
Transfer to Debt Service Fund			105,000.00
Transfer to General Fund		2,543.66	140,875.39
Tax Assessor/Collector Fee		2,690.00	5,380.00
Rendition Penalty CAD Portion			8.39
Postage		36.43	62.36
Supplies			273.05
Records Maintenance			30.00
Copies			14.14
TOTAL DISBURSEMENTS	**($**	**5,982.85)**	**(253,089.65)**

MASON CREEK U.D.

Disbursements for month of September, 2020

Check #	Payee	Description		Amount
	Bob Leared	Tax Assessor/Collector Fee	$	3,140.88
	Schulte Diane	Refund - due to adjustments		171.43
	Dershowitz Mark S	Refund - due to adjustments		87.75
	Sander David A & Andrea	Refund - due to adjustments		175.50
	Clark Deann Renae & Donald W	Refund - due to adjustments		141.46
	Nottingham Enterprises Inc	Refund - due to adjustments		460.55
	D L Peterson Trust	Refund - due to adjustments		8.46
	Hal Gordon	Atty's Fees, Delq. collection		607.04
	HCAD	CAD Quarterly Assessment		4,334.00
	Arthur J. Gallagher	Tax A/C Bond Premium		2,188.00
	W/T to General Fund	Transfer to General Fund		2,831.11
TOTAL DISBURSEMENTS			$	14,146.18

Comercia Bank

Account # 1881071698

MASON CREEK U.D.

HISTORICAL COLLECTIONS DATA

Year	Collections Month Of 8/2020	Adjustments To Collections 8/2020	Total Tax Collections at 8/31/2020	Total Taxes Receivable at 8/31/2020	Collection Percentage
2019	4,282.02	1,045.15-	2,240,063.73	23,298.78	98.971
2018	5.82		2,022,674.12	10,654.59	99.476
2017			1,976,172.21	6,051.90	99.695
2016	34.74		1,919,591.67	5,531.06	99.713
2015			1,801,345.61	3,613.48	99.800
2014			1,669,109.39	1,975.07	99.882
2013			1,551,048.88	1,919.09	99.876
2012			1,433,033.63	2,561.90	99.822
2011			1,402,237.24	827.87	99.941
2010			1,373,082.42	844.71	99.939
2009			1,304,781.66	688.73	99.947
2008			1,320,463.39	446.17	99.966
2007			1,293,452.59	460.00	99.964
2006			1,245,627.33	211.32	99.983
2005			1,250,390.57		100.000
2004			1,232,862.30		100.000
2003			1,234,715.11		100.000
2002			1,208,639.36		100.000
2001			1,206,455.44		100.000
2000			1,129,973.26		100.000
1999			1,136,515.86		100.000
1998			1,335,691.65		100.000
1997			1,754,364.21		100.000
1996			1,712,348.07		100.000
1995			1,680,231.55		100.000
1994			1,654,041.74		100.000
1993			1,637,658.31		100.000
1992			1,539,435.80		100.000
1991			1,554,908.83		100.000
1990			1,498,179.72		100.000
1989			1,719,641.57		100.000
1988			1,764,618.27		100.000
1987			1,426,997.68		100.000
1986			1,586,696.66		100.000
1985			1,621,520.38		100.000
1984			1,542,927.07		100.000
1983					100.000
1982					100.000
1981					100.000
1980					100.000
1979					100.000
1978					100.000
1977					100.000

(Percentage of collections same period last year 99.078)

MASON CREEK U.D.

HISTORICAL TAX DATA

Year	Taxable Value	SR/CR	Tax Rate	Adjustments	Reserve for Uncollectibles	Adjusted Levy
2019	644,832,662	12/12	.351000	180,752.27		2,263,362.51
2018	616,160,140	21/21	.330000	53,798.20		2,033,328.71
2017	613,691,683	33/33	.323000	84,739.53		1,982,224.11
2016	595,728,746	44/44	.323000	85,607.71		1,924,203.65
2015	558,522,803	48/48	.323000	129,836.37		1,804,028.85
2014	499,576,755	57/57	.334500	119,819.02		1,671,084.46
2013	448,834,647	57/57	.346000	153,329.99		1,552,967.97
2012	414,911,954	68/68	.346000	33,818.73		1,435,595.53
2011	405,869,877	79/79	.346000	34,275.56	1,244.81	1,403,065.11
2010	397,790,786	01/89	.346000	180,542.83	2,429.09	1,373,927.13
2009	403,686,729	01/67	.324000	187,342.23	2,474.55	1,305,470.39
2008	408,223,868	02/64	.324000	191,293.85	1,735.95	1,320,909.56
2007	399,957,757	01/65	.324000	192,684.83	1,950.66	1,293,912.59
2006	383,814,345	01/79	.325000	114,159.76	1,558.63	1,245,838.65
2005	385,218,036	01/65	.325000	150,629.38	1,569.04	1,250,390.57
2004	379,689,980	01/46	.325000	85,401.47	1,131.14	1,232,862.30
2003	380,397,270	04/31	.325000	88,461.26	1,577.04	1,234,715.11
2002	372,545,410	09/40	.325000	34,776.38	1,768.83	1,208,639.36
2001	371,839,550	06/39	.325000	84,565.91	2,024.20	1,206,455.44
2000	348,201,520	08/41	.325000	46,924.32	1,682.74	1,129,973.26
1999	325,284,110	34/34	.350000	39,350.31	1,979.23	1,136,515.86
1998	297,019,150	30/30	.450000	142,556.63	895.33	1,335,691.65
1997	289,979,040	32/32	.605270	83,374.41	475.07	1,754,364.21
1996	284,211,700	00/00	.602750	56,041.39	904.80	1,712,348.07
1995	278,889,510	00/00	.602750	77,470.07	775.31	1,680,231.55
1994	274,619,870	00/00	.602750	60,861.05	1,229.74	1,654,041.74
1993	255,166,980	00/00	.602750	98,860.63	765.78	1,637,658.31
1992	253,510,589	00/00	.579000	67,799.06	844.99	1,539,435.80
1991	265,449,300	00/00	.579000	19,377.25	1,486.08	1,554,908.83
1990	245,142,850	00/00	.590000	52,892.67	1,055.93	1,498,179.72
1989	247,162,690	00/00	.680000	41,727.06	2,791.75	1,719,641.57
1988	230,623,860	00/00	.760000	11,877.01		1,764,618.27
1987	210,507,060	00/00	.580000	58,697.50		1,426,997.68
1986	223,036,320	00/00	.650000	86,956.40		1,586,696.66
1985	245,806,520	00/00	.650000	24,756.12		1,621,520.38
1984	209,556,450	00/00	.650000	180,810.14		1,542,927.07
1983	190,906,938	00/00	.650000	48.29-	11,700.00	1,228,499.17
1982	171,926,014	00/00	.720000	5,646.67-		1,232,220.73
1981	165,847,230	00/00	.500000	398.90-		828,669.60
1980	134,955,200	00/00	.500000	191.00-		674,588.50
1979	98,297,720	00/00	.500000	10.00-		491,476.35
1978	62,776,176	00/00	.500000	6.25-		313,874.63
1977	46,831,565	00/00	.750000	78.75-		351,157.99

MASON CREEK U.D.

TAX RATE COMPONENTS

Year	Debt Service Rate	Debt Service Levy	Maintenance Rate	Maintenance Levy
2019	.044000	283,726.30	.307000	1,979,636.21
2018	.027000	166,363.30	.303000	1,866,965.41
2017	.027000	165,696.69	.296000	1,816,527.42
2016	.031000	184,675.83	.292000	1,739,527.82
2015	.031000	173,142.03	.292000	1,630,886.82
2014	.033500	167,358.27	.301000	1,503,726.19
2013	.043000	192,998.98	.303000	1,359,968.99
2012	.043000	178,412.22	.303000	1,257,183.31
2011	.043000	174,369.42	.303000	1,228,695.69
2010			.346000	1,373,927.13
2009			.324000	1,305,470.39
2008			.324000	1,320,909.56
2007			.324000	1,293,912.59
2006			.325000	1,245,838.65
2005			.325000	1,250,390.57
2004	.023870	90,549.05	.301130	1,142,313.25
2003	.046180	175,443.51	.278820	1,059,271.60
2002	.067000	249,165.60	.258000	959,473.76
2001	.189640	703,976.04	.135360	502,479.40
2000	.202600	704,407.93	.122400	425,565.33
1999	.232000	753,347.61	.118000	383,168.25
1998	.450000	1,335,691.65		
1997	.605270	1,754,364.21		
1996	.602750	1,712,348.07		
1995	.602750	1,680,231.55		
1994	.602750	1,654,041.74		
1993	.602750	1,637,658.31		
1992	.579000	1,539,435.80		
1991	.579000	1,554,908.83		
1990	.590000	1,498,179.72		
1989	.680000	1,719,641.57		
1988	.760000	1,764,618.27		
1987	.580000	1,426,997.68		
1986	.650000	1,586,696.66		
1985	.650000	1,621,520.38		
1984	.650000	1,542,927.07		
1983	.650000	1,228,499.17		
1982	.720000	1,232,220.73		
1981	.500000	828,669.60		
1980	.500000	674,588.50		
1979	.500000	491,476.35		
1978	.500000	313,874.63		
1977	.750000	351,157.99		

MASON CREEK U.D.

Notes:

$1045.15 - REPORTED AS TAXES COLLECTED ON PREVIOUS REPORTS.
TRANSFERRED TO REFUND OF ADJUSTMENTS DUE TO CAD
C/R #12. 2019 VARIOUS ACCOUNTS.

MASON CREEK U.D.

Tax Exemptions:	2019	2018	2017
Homestead	.200	.200	.200
Over 65	50,000	50,000	50,000
Disabled	150,000	150,000	150,000

Last Bond Premium Paid:

Payee	Date of Check	Amount
Arthur J. Gallagher 10/15/2020 - 10/15/2021	9/08/2020	2,188.00

Adjustment Summary:	2019	
10/2019	/ CORR 002	179,887.47
11/2019	/ CORR 003	8,542.32
12/2019	/ CORR 004	588.49-
1/2020	/ CORR 005	1,029.10
2/2020	/ CORR 006	876.59-
3/2020	/ CORR 007	3,288.05-
4/2020	/ CORR 008	808.21-
5/2020	/ CORR 009	1,525.76-
6/2020	/ CORR 010	409.12-
7/2020	/ CORR 011	165.25-
8/2020	/ CORR 012	1,045.15-
TOTAL		180,752.27

MASON CREEK U.D.
Homestead Payment Plans

Account no.	Tax Year	Last Payment Amount	Last Payment Date	Balance Due

*Total Count 0

(I) - BLI Contract (A) - Delinquent Attorney Contract

Standard Payment Plans

Account no.	Tax Year	Last Payment Amount	Last Payment Date	Balance Due

*Total Count 0

MASON CREEK U.D. PAYMENT REPORT 9/08/20 15.14 PAGE 1
DIST: 321 73120/2500 THRU 90120/2546

ACCOUNT NO JUR YEAR	TAX AMT	PTL/INT	COLL FEE	TOTAL	PAID BY	DATE PAID
0101-002-0520 321 2019	715.06	135.86	170.18	1,021.10	738	20/08/21
DELGADO STEPHEN & DEBRA						
0104-007-0640 321 2019	334.16			334.16	738	20/08/31
SMITH MATTHEW & AMANDA						
0108-017-0270 321 2019	1,247.92	237.10	297.00	1,782.02	F84	20/08/26
PAULSEN THOR K						
0109-003-0240 321 2019	814.32	154.72	193.81	1,162.85	738	20/08/27
MADDOX STEPHEN B & AMY A						
0109-006-0060 321 2019	1,164.37	221.23	277.12	1,662.72	738	20/08/27
ULLAH SANA & TRUST						
9900-219-2830 321 2016	34.74	11.81	9.31	55.86	738	20/08/31
LYONS FORGE INNOVATIONS						
321 2018	5.82	1.98	1.68	9.48	738	20/08/31
321 2019	6.19	1.29	1.62	9.10	738	20/08/31

YEAR	TAX AMT	PTL/INT	COLL FEE	TOTAL	PAID	DATE
2019	4,282.02	750.20	939.73	5,971.95		
2018	5.82	1.98	1.68	9.48		
2016	34.74	11.81	9.31	55.86		
**TOTAL -->	4,322.58	763.99	950.72	6,037.29		

MASON CREEK UTILITY DISTRICT

2020 Tax Rate Recommendation

Developed District

Year	Assessed Valuation	Tax Year	Tax Rate Debt	Tax Rate M & O	Tax Rate Total	98% D/S Collex	Interest At 0.25%	Debt Service	Annual Change	Ending Balance	% of Next Year's D/S	98% M&O Collex
2010	$403,695,139	(2009)	$0.00000	$0.32400	$0.32400							$1,281,813
2011	397,801,145	(2010)	0.00000	0.34600	0.34600							1,348,864
2012	406,038,587	(2011)	0.04300	0.30300	0.34600							1,205,691
2013	414,705,548	(2012)	0.04300	0.30300	0.34600							1,231,427
2014	448,775,146	(2013)	0.04300	0.30300	0.34600							1,332,593
2015	499,576,755	(2014)	0.03350	0.30100	0.33450							1,473,652
2016	558,522,803	(2015)	0.03100	0.29200	0.32300							1,598,269
2017	595,728,746	(2016)	0.03100	0.29200	0.32300							1,704,737
2018	613,691,683	(2017)	0.02700	0.29600	0.32300							1,780,197
2019	616,160,140	(2018)	0.02700	0.30300	0.33000							1,829,626
2020	644,832,662	(2019)	0.04400	0.30700	0.35100							1,940,044
2021	***666,527,318***	***(2020)***	***0.03900***	***0.32147***	***0.36047***	***$254,747***	***$883***	***($256,892)***	***($1,262)***	***351,932***	***136.46%***	***2,099,832***
2022	666,527,318	(2021)	0.03900	0.32147	0.36047	254,747	880	(257,900)	(2,273)	349,659	136.11%	2,099,832
2023	666,527,318	(2022)	0.03900	0.32147	0.36047	254,747	874	(256,900)	(1,279)	348,380	135.48%	2,099,832
2024	666,527,318	(2023)	0.03900	0.32147	0.36047	254,747	871	(257,150)	(1,532)	346,848	134.80%	2,099,832
2025	666,527,318	(2024)	0.03900	0.32147	0.36047	254,747	867	(257,300)	(1,686)	345,161	134.15%	2,099,832
2026	666,527,318	(2025)	0.03900	0.32147	0.36047	254,747	863	(257,300)	(1,690)	343,471	133.59%	2,099,832
2027	666,527,318	(2026)	0.03900	0.32147	0.36047	254,747	859	(257,100)	(1,495)	341,976	129.93%	2,099,832
2028	666,527,318	(2027)	0.03900	0.32147	0.36047	254,747	855	(263,200)	(7,598)	334,378	129.05%	2,099,832
2029	666,527,318	(2028)	0.03900	0.32147	0.36047	254,747	836	(259,100)	(3,517)	330,861	129.75%	2,099,832
2030	666,527,318	(2029)	0.03900	0.32147	0.36047	254,747	827	(255,000)	574	331,435	127.04%	2,099,832
2031	666,527,318	(2030)	0.03900	0.32147	0.36047	254,747	829	(260,900)	(5,325)	326,110	120.07%	2,099,832
2032	666,527,318	(2031)	0.03900	0.32147	0.36047	254,747	815	(271,600)	(16,038)	310,072	114.00%	2,099,832
2033	666,527,318	(2032)	0.03900	0.32147	0.36047	254,747	775	(272,000)	(16,478)	293,594	107.82%	2,099,832
2034	666,527,318	(2033)	0.03900	0.32147	0.36047	254,747	734	(272,300)	(16,819)	276,775	101.57%	2,099,832
2035	666,527,318	(2034)	0.03900	0.32147	0.36047	254,747	692	(272,500)	(17,061)	259,713	95.27%	2,099,832
2036	666,527,318	(2035)	0.03900	0.32147	0.36047	254,747	649	(272,600)	(17,204)	242,509	87.36%	2,099,832
2037	666,527,318	(2036)	0.03900	0.32147	0.36047	254,747	606	(277,600)	(22,247)	220,262	79.55%	2,099,832
2038	666,527,318	(2037)	0.03900	0.32147	0.36047	254,747	551	(276,880)	(21,583)	198,680	70.69%	2,099,832
2039	666,527,318	(2038)	0.03900	0.32147	0.36047	254,747	497	(281,050)	(25,807)	172,873		2,099,832

Average 2019 H/S	$275,445
Average 2020 H/S	$277,577
Percent Increase	0.77%
Tax Roll Increase	3.36%
M&O Tax Rollback =	$0.31529

Tax Bill		
$773.45		
800.47		
$27.02	Increase	
	3.49%	

Notes: ***Ending Balance***, 2020, represents debt service fund as of August 12, 2020
Assessed Valuation, Tax Year 2019, includes $53,781,871 in uncertified values.
Each 1 penny of maintenance tax yields $65,320 at 98% collections.

Tax Rates.xls
2020
9/10/2020
Prepared by Bill Blitch

MASON CREEK UTILITY DISTRICT

2020 Tax Rate--Effects of Alternative Maintenance Tax Rates

Proposed Tax Rates			*Change in*	*% Change*	*Change In*	
Debt	*M&O*	*Total*	*Tax Bills*	*in Tax Bill*	*M&O Levy*	
$0.03900	**$0.30930**	**$0.34830**	**($0.01)**	**0.00%**	**$80,294**	**Same Tax Bill**
0.03900	0.31000	0.34900	1.55	0.20%	84,866	
0.03900	**0.31200**	**0.35100**	**5.99**	**0.77%**	**97,930**	**Same Tax Rate**
0.03900	0.31400	0.35300	10.43	1.35%	110,994	
0.03900	0.31600	0.35500	14.87	1.92%	124,058	
0.03900	0.31800	0.35700	19.31	2.50%	137,122	
0.03900	0.32000	0.35900	23.75	3.07%	150,186	
0.03900	**0.32147**	**0.36047**	**27.02**	**3.49%**	**159,788**	**Maximum Developed**
0.03900	0.32200	0.36100	28.19	3.64%	163,250	
0.03900	0.32400	0.36300	32.63	4.22%	176,314	
0.03900	0.32600	0.36500	37.08	4.79%	189,377	
0.03900	0.32800	0.36700	41.52	5.37%	202,441	
0.03900	0.33000	0.36900	45.96	5.94%	215,505	
0.03900	0.33200	0.37100	50.40	6.52%	228,569	
0.03900	0.33400	0.37300	54.84	7.09%	241,633	
0.03900	0.33600	0.37500	59.28	7.66%	254,697	
0.03900	**0.33710**	**0.37610**	**61.72**	**7.98%**	**261,882**	**Maximum Developing**

Tax Rates.xls
2020
9/10/2020
Prepared by Bill Blitch

VENTURI ENGINEERS
CIVIL ENGINEERING AND CONSULTING
WWW.VENTURIENG.COM

ENGINEERING REPORT

MASON CREEK UTILITY DISTRICT

Prepared for:	Board Meeting – September 9, 2020
Prepared by:	Jose M. de Leon, PE

DRAFT

Brondesbury Lift Station Conversion:
- VE addressing comments.
- VE to coordinate with Attorney for Front-End Specifications.

Rennie Lift Station Conversion:
- VE addressing comments.
- VE to coordinate with Attorney for Front-End Specifications.

Galleon Oaks Water Plant – ATS Replacement and Electrical Upgrades:
- Notice to Proceed has not been issued.

Kingsland Blvd. Emergency Sanitary Sewer Repair:
- VE received and reviewed the video of the repaired sanitary sewer lines.
- Final walk-thru items have been addressed.
- Contractor has not submitted final pay application.

Kingsland Blvd. & Prince Creek Sanitary Sewer Rehabilitation:
- Plans under review by City of Houston.
- VE to coordinate with Attorney for Front-End Specifications.

Forcemain Corrosion Evaluation:
- VE to provide recommendations for forcemain replacement/rehab.

Smart Water Meter System:
- No items.

Miscellaneous:
- VE in the process of reviewing Ellingham Sanitary Sewer Video.

Bid Protest:

From: Craig Kersting <craig@hohi.net>
Sent: Monday, August 31, 2020 8:56 AM
To: directors <directors@mcud.com>; Jose de Leon <jdeleon@venturieng.com>
Cc: Clyde Bryan <clyde@hohi.net>
Subject: Protest Letter - Highlights Electrical

August 31st, 2020
HIGHLIGHTS ELECTRICAL
7510, Langtry Street
Houston, TX, 77040.
Phone: 713-266-6464
Fax: 713-690-9922

RE: Bid Protest MCUD- Galleon Oaks Water Plant Electrical Improvements
Project No.: VE Project# 19-080

The purpose of this letter is to formally protest the award of the above-referenced project to Hi-Tork Power, Inc. We have established and expounded in more detail below, that, Hi-Tork Power, Inc's bid fails to follow the clear bid criteria and should consequently be rejected as non-responsive. Conversely, Highlights Electrical's bid complied with all of the requirements and is the lowest responsive bid.

A bid is non-responsive if it does not comply with what the bidding documents entail and demand. *Valley Crest Landscape Vs. City Council (1996) Cal. App.4th 1432.*

Here, Highlight Electricals submitted duly filled bid forms that are compliant and consistent with the application process, hence dubbed "correct and properly submitted". The project should be awarded to the lowest qualified bidder pursuant to the bond's information. Our company demonstrated profound ability and commitment to execute the aforementioned project should it be awarded to us. This is with regards to the submitted additional information pursuant to NEMA 3R, and NEMA3RX, to correct our initial bid. By the foregoing information, Highlight Electricals won the bid as it is the responsive bidder amongst the other six.

Whereas Highlight Electricals took this clear direction seriously with regard to its bid bond, the engineering consultant did not. Rather, the engineer consultant cited "non-conforming" items in our bid, which he never bothered to investigate in an attempt to get an official clarity on the same. The Engineer sites flaw in our Qualification Statement, which he finds to be inconsistent with the requested project's. As set forth, our bid doesn't infringe on any of the contracting party's bond requirements. It can be fairly disputed that the Engineer was not fair and that his assertions are inclusive.
Additional ground exists, which makes Hi-Tork Power, Inc bid non-responsive. Every party is informed, and it is within the public domain that Highlights Electrical has 34 years' experience. It is well known in furnishing, delivery, and installation of service-rated automatic transfer switch with pads, weather-heads, ducts, wiring, conduits, e.tc. This includes but not limited to demolition and removals as described in the Contract Documents.

Hi-Tork Power, Inc's bid also appears to be imbalanced. Looking at just the bid amounts and values, it exceeds our projection by almost $16,000, which is up 20%. Given the relatively bigger percentage and value difference, it appears that Hi-Tork Power, Inc may have overloaded its unit priced items and under-bid its lump sum in such a way that it may actually cost MCUD rather significantly should quantities increase or decrease from those estimated.

For all these foregoing reasons that show Hi-Tork Power, Inc's apparent low bid to be fatally flawed and non-responsive, Highlights Electricals respectfully requests that Hi-Tork Power, Inc's bid be found non-responsive and that the project be awarded to Highlights Electrical as the lowest, responsive, responsible, and qualified bidder. We look forward to working with MCUD to appropriately and amicably resolve this situation without any potential for a legal tussle.

Thank you,
Craig Kersting
Senior Estimator
Highlights Electrical
7510 Langtry
Houston, Texas 77040
713-266-6464 Office
281-802-6211 Mobile

Selected correspondence related to bid protest (in date order, latest first):

From: Craig Kersting <craig@hohi.net>
Sent: Monday, August 31, 2020 9:38 AM
To: Jose de Leon <jdeleon@venturieng.com>; directors <directors@mcud.com>
Cc: Clyde Bryan <clyde@hohi.net>
Subject: RE: Highlights Electrical - Protest

Jose,

I would like to see the other bidders proposals via an open records request. The board of directors should be very concerned you have recommend Hi-Tork, a company whose likely in violation state law as governed by the Texas Department of Licensing and Regulation. At issue, Hi-Tork does not have their master license shown on their website, and possibly not the proposal the submitted. I would consider this an irregularity.

> **73.51. Electrical Contractors' Responsibilities.**
> ***(Effective January 1, 2010, 34 TexReg 9433; amended effective March 15, 2012, 37 TexReg 1703; amended effective September 1, 2015, 40 TexReg 5147)***
> **(a) An electrical contractor shall:**
> **(1) notify the department when a new master electrician of record is assigned to the contractor and notify the department within thirty business days from the date that the master electrician's employment with the contractor ended;**
> **(2) maintain employee records and records of all work performed on its behalf for a period of four years after completion of the work, and shall make those records available to the department at the contractor's place of business during normal business hours for inspection and copying. If the contractor's principal place of business is located out of the state of Texas, the department may require the contractor to make records available to the department at its offices in Austin, Texas or another location agreed upon by the department and the contractor.**
> **(b) A person or contractor that performs or offers to perform electrical work shall:**
> **(1) provide safe and proper installation and service, and assure the electro-mechanical integrity of all work and installations are to applicable code;**
> **(2) not misrepresent the need for services, services to be provided, or services that have been provided;**
> **(3) not make a fraudulent promise or false statement to influence, persuade, or induce an individual or an entity to contract for services; and**
> **(4) ensure that all of an electrical contractor's electrical work shall be performed by licensed individuals.**
> **(c) The design of an electrical system shall only be done by a licensed master electrician or design professional as authorized by statute. The design shall not be subcontracted to an unlicensed person, firm or corporation.**
> **(d) A licensed electrical contractor shall display its name and license number on both sides of each vehicle owned or operated by the business and used in the conduct of electrical work. Lettering shall be of a contrasting color and at least two inches in height. The license number shall be preceded by the letters "TECL".**
> **(e) All advertising by electrical contracting companies designed to solicit electrical business shall include the electrical contractor's name and license number. This includes business cards. The following advertising does not require the license number:**
> **(1) nationally placed television advertising, in which a statement indicating that license numbers are available upon request is used in lieu of the electrical contractor license number;**
> **(2) telephone book listings that contain only the name, address, and telephone number;**
> **(3) manufacturers' and distributor's telephone book trade ads identifying an electrical contractor;**
> **(4) telephone solicitations, provided the solicitor states that the contractor complies with licensing requirements of the state. The electrical contractor's number must be provided upon request;**
> **(5) promotional items of nominal value such as ball caps, tee shirts, and other gifts; or**
> **(6) signs located on the contractor's permanent business location.**
> **(f) The electrical contractor's name, address, phone number, and license number shall appear on all proposals, invoices, and written contracts from the contractor. The following information: "Regulated by The Texas Department of Licensing and Regulation, P. O. Box 12157, Austin, Texas 78711, 1-800-803-9202, 512-463-6599; website: www.tdlr.texas.gov" shall be listed on all proposals, invoices, and written contracts.**
> **(g) A licensed electrical contractor and its designated master electrician of record is responsible for supervision of all licensees performing work on behalf of the contractor to assure compliance with applicable statutes and rules and in particular, standards of conduct set out in this chapter.**
> **(h) An electrical contractor shall not use a license that is not assigned to that contractor.**

Unfortunately, we didn't not list similar work in terms of "serving water or sanitary sewer utility", and instead listed work in terms of "installation of ATS units". If the board of directors and HOA feel it's necessary to over spend for the installation of an ATS then it's their prerogative.

Sincerely,
Craig Kersting
Highlights Electrical

From: Jose de Leon <jdeleon@venturieng.com>
Sent: Monday, August 31, 2020 9:08 AM
To: Craig Kersting <craig@hohi.net>
Cc: Clyde Bryan <clyde@hohi.net>
Subject: Re: Highlights Electrical - Protest

Craig,
Good morning. On behalf of the Board (at request of the President), I am responding to your inquiry from last week. Below is a summary of the items that we found regarding the Highlight's Electrical bid:

> Several different terms and conditions were included in the Higlights bid, which made the Highlights bid different from the terms and conditions advertised by the District and different from those bid-upon by the other bidders. A municipal utility district cannot legally award a contract on such a bid, because the competitive bidding laws require that the terms and conditions of the contract be the same for all bidders (and advertised).
>
> The specific automatic transfer switch (enclosure) included in the Highlights bid does not meet the specifications advertised by the District and bid-upon by the other bidders. A municipal utility district cannot legally award a contract on such a bid, because the competitive bidding laws require that the specifications be the same for all bidders (and advertised).
>
> Furthermore, even if the Highlights bid could be considered for contract award, the Highlights Qualification Statement (BID-105) did not show any experience---as either prime contractor or subcontractor—doing similar work (furnishing, delivering and installing automatic transfer switches for back-up or emergency power equipment serving water or sanitary sewer utility facilities). This made it impossible for the Engineer or the Board to determine Highlight's responsibility for this project.

Please feel free to contact me if you would like to discuss in detail. Thank you.
Jose M. de Leon, PE
Venturi Engineers LLC
Jose M. de Leon, PE, LEED AP
VENTURI ENGINEERS LLC
832-447-1237

From: Craig Kersting <craig@hohi.net>
Sent: Tuesday, August 25, 2020 9:25:52 AM
To: Jose de Leon <jdeleon@venturieng.com>
Cc: Clyde Bryan <clyde@hohi.net>
Subject: RE: Highlights Electrical - Protest

Thank you Jose!

We truly believe we're the best contractor with the best price which in turn ultimately benefits the best interest of the local taxpayers. We would like to personally meet with the board members in order to provide additional information about Highlights Electrical and answer any questions they may have.

Thank you,
Craig Kersting
Highlights Electrical
713-266-6464 Office
281-802-6211 Mobile
craig@hohi.net

[Sent 8-11-2020]

Jose,
Attached is a list of some of the most recent ATS and Waste Water Treatment projects we've completed. Please feel

free to reach out to anyone on the list. If you have any additional questions don't hesitate to contact myself or Fred Soland.

C. Fred Soland
Construction Manager
713-266-6464 Main SWBD
713-986-7917 Direct Line
281-850-0809 Cell
Soland@HOHI.NET
TECL 18946

Thank you,
Craig Kersting
Senior Estimator
Highlights Electrical

Completed Projects by Highlights Electrical

Automatic Transfer Switch Installation

1. KRIV – TV - Installed ATS and Multiple UPS units for station. (Completed)
   Robert Byrne 713-302-2777

2. KTRK-TV – Installed ATS and Main UPS for Station (Completed)
   Jason Mangold 713-306-3290

3. City of Houston – Municipal Courts Building – Installed ATS and multiple UPS units for the building (Completed)
   Garrett Jurica 713-673-0291

Waste Water Treatment Plants Installations

1. METRO Northwest Bus Operating Facility – Install complete WWTP (Completed)
   Gregg Robinson - 713-615-6150

2. METRO Kashmere Bus Operating Facility – Install complete WWTP (Completed)
   Gregg Robinson- 713-615-6150

3. METRO Hiram Clarke Bus Operating Facility – We are about to begin construction on a New WWTP for this facility.
   Russell Ryan 281-450-6238

[Sent 8-7-2020]

Jose,

I wanted to follow up with you on the Galleon Water Plant ATS project to see if you had any questions.

One thing I noticed on the ATS data sheet we included was our supplier listed the unit as "Type NEMA 3R", but just so you know it will actually be constructed of stainless steel. Additionally, it includes a SPD as specified. If you have any questions, please don't hesitate to contact me.

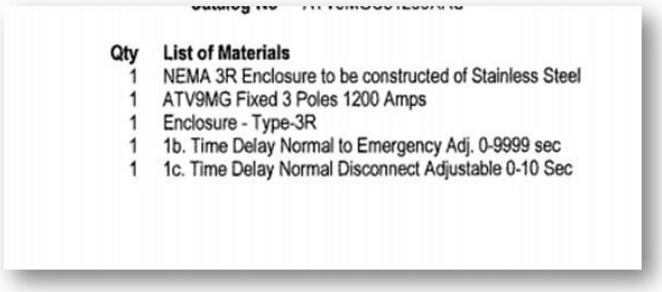

Qty	List of Materials
1	NEMA 3R Enclosure to be constructed of Stainless Steel
1	ATV9MG Fixed 3 Poles 1200 Amps
1	Enclosure - Type-3R
1	1b. Time Delay Normal to Emergency Adj. 0-9999 sec
1	1c. Time Delay Normal Disconnect Adjustable 0-10 Sec

Catalog No	SPD250480Y3P
Designation	250 kA SPD

Qty	List of Materials
1	Eaton SPD series250kA277/480VSTD+CntrNEM

Thank you,
Craig Kersting
Senior Estimator

Highlights Electrical
7510 Langtry
Houston, Texas 77040
713-266-6464 Office
281-802-6211 Mobile

MEMORANDUM

TO: Honorable Members of Board of Directors, Mason Creek Utility District

FROM: James L. Dougherty, Jr., Attorney at Law

DATE: September 10, 2020

SUBJECT Bid protest filed by Highlights of Houston, Inc., dba Highlights Electrical

---

Highlights of Houston, Inc., dba Highlights Electrical (HOH) has filed a protest to the award of the contract for the electrical improvements at the Galleon Oaks Water Plant. A copy of the HOH bid package is attached, with added notes.

The HOH bid package contains six extra pages. See PDF pages 14-19. The extra pages show added specifications, added drawings and added terms and conditions, including, among others:

--Possible price increases
--Possible time extensions, or excuses for delays
--Requirement that the District furnish all insurance except Workers Compensation.

Moreover, the engineer has reported that the specific transfer switch enclosure listed on the first page of HOH bid does not meet the advertised specifications. See PDF page 2.

The indicated differences cause a conflict with a fundamental principle for competitive bidding of public works contracts in Texas, which is that bidders must bid on the same thing. Here's the way the Texas Supreme Court described it:

> The Supreme Court of Delaware . . . has stated that the term "competitive bidding" as used in the law applicable to the letting of public contracts requires due advertisement and the giving of an opportunity to bid, and contemplates a bidding on the same undertaking upon each of the same material items covered by the contract, and ***it requires that all bidders be placed upon the same plane of equality and that they each bid upon the same terms and conditions involved in all the items and parts of the contract,*** and that the proposals specify as to all bids, the same or substantially similar specifications. (emphasis added)

A bid with added specifications, drawings, terms and conditions conflicts with this fundamental principle of equality. Another way of looking at this situation is that HOH was bidding on a contract different from the one that was advertised, and advertisement is required by law. Either way, the District should not award the contract to HOH.

It also appears that the HOH bid was not recommended for award because the Qualification Statement (BID-105) did not show any years of experience doing similar work (furnishing, delivering and installing automatic transfer switches for back-up or emergency power equipment serving water or sanitary sewer utility facilities). Nor did it clearly show any recent projects for similar work. See PDF page 6.

In my opinion, each of the issues discussed above supports a decision not to award the advertised contract to HOH. (Note: The HOH bid also contained other irregularities not discussed in this memorandum.)

--JLD

Form BID-106.08 ATS-Galleon Oaks 2020-7-16

OFFICIAL BID FORM

Owner: Mason Creek Utility District
Owner's Office: 847 Dominion, Katy, TX 77450; ph. 281-578-7272, fax 281-578-1419
Project (the Work): Furnish, deliver and install service-rated automatic transfer switch with pad, weatherheads, ducts, wiring, conduits, etc. at Galleon Oaks Water Plant, including demolition, removals, etc., all as further described in the Contract Documents.
Project location: 1609 Galleon Oaks, Katy, TX 77450

INVESTIGATION AND INFORMATION. The Bidder assures the Owner that: (1) the Bidder has become fully informed about the Project and the conditions under which the work will be performed; (2) the Bidder has inspected the locations; (3) the Bidder has become thoroughly familiar with the Contract Documents (described below); (4) the Bidder understands that the accuracy or completeness of any information relied upon by the Bidder is not guaranteed by the Owner, unless otherwise stated in writing by the Owner; (5) in any event, the Bidder has made its own interpretation of all such information; and (6) the Bidder has not colluded with any other bidder or potential bidder on this Project.

CONTRACT DOCUMENTS; ADDENDA. The Contract Documents, as amended to date, are on file at the Owner's Office and open to public inspection. All Contract Documents are incorporated into this bid by this reference. Bidder acknowledges receipt of all addenda posted on civcastusa.com at least 72 hours preceding the deadline for submission of this bid.

OFFER; CONTRACT TIME; CONTRACT PRICE. Taking into account the investigation and information mentioned above, the Bidder offers to furnish all labor, materials, tools, equipment, supervision, services, incidentals and other items for the Project and to perform all other duties required, within the Contract Time, which is 120 calendar days (subject to change as provided in the General Conditions), for the Contract Price shown below:

This model reported not to meet specifications.

Contract Price in figures	*Contract Price in words*
$ 78,860.00	Seventy Eight Thousand Eight Hundred Sixty Dollars and Zero Cents

MODEL NUMBER, ETC. OF SWITCH. Bidder proposes—and will furnish--the specific automatic transfer switch listed below and certifies that it complies with the Specifications and other Contract Documents:

Manufacturer	Model No.	*Webpage URL with detailed switch description:*
Eaton	ATC3C5C31200XRU	https://www.eaton.com/content/dam/eaton/products/low-voltage-power-distribution-controls-systems/ats/resources/ts50-ca08100003e.pdf

AWARD; DELIVERY OF DOCUMENTS. If the Owner awards the contract for the Project to the Bidder, the Bidder agrees to deliver all of the required Contract Documents, with all legally-required certifications (e.g., Form 1295 and, if applicable, Ch. 176, LGC disclosure) and proof of insurance, to the Owner within ten days of receiving the unsigned Contract Documents. All such documents must be duly completed and signed by Bidder and its surety and must comply with by the Instructions to Bidders, the Insurance Specifications (BID-301) and the other Contract Documents, as applicable. If the Bidder fails to deliver all such completed and signed documents to the Owner within the time allowed, the Owner may revoke the award to the Bidder---in which case the Bidder must pay to the Owner the amount of the Bid Security as the Owner's fixed and liquidated damages for delay, disruption and incidental expenses, it being agreed that the Owner's complete damages would be difficult to ascertain. The Owner may cash and keep any check submitted by Bidder, and the amount kept shall be applied to the amount the Bidder must pay to the Owner.

As allowed by Section 2252.904 of the Texas Government Code (as added by Acts 2007, 80th Leg., R.S., Ch. 466, § 1, eff. September 1, 2007) this bid form provides for award of attorneys fees to: (i) the Owner in a dispute in which the Owner prevails, and (ii) to each other party to this bid form if that party prevails in the dispute.

BID SECURITY. The minimum amount of Bid Security is five percent of the "greatest amount bid" or "GAB" (which is the total of all bid prices for all bid items, including alternates). Bidder understands that it must submit either: (i) a certified or cashier's check made payable to the Owner in such amount, or (ii) a bid bond payable to the Owner *using the official bid bond form* in this Official Bid Form, with a surety that meets the prescribed qualifications and with a penal sum at least equal to such amount.

QUALIFICATION STATEMENT. Bidder assures the Owner that the information in the Qualification Statement, Form BID-105, is true, complete and correct.

Irregularity in name of Bidder.

FIRM BID PERIOD. This bid shall remain firm through the 90th day following the day it is opened, and an effective award may be made during that period. During that period, the Bidder may not withdraw this bid, but the Bidder may do so afterward unless an award is made first. *See* Instructions to Bidders.

Respectfully submitted by: M.B. Daniel ("Bidder")

(print Bidder's full legal name)

Date: 08/04/2020 By: *(authorized signature)* _____

Name (*printed*): M.B. Daniel, Title: President

Address: 7510 Langtry St, Houston, TX 77040

Phone: 713-266-6464 Fax: 713-690-9922 Email: bids@hohi.net

***Bidder must sign this bid and attach**: (1) Bid Security (see above), and (2) Qualification Statement, Form BID-105. The Owner asks each bidder to enclose a photocopy of its entire submission, plainly marked "COPY."*

QUALIFICATION STATEMENT

(To be submitted by each bidder. If a bid is submitted by two or more entities, each entity must complete a separate statement.)

Owner: Mason Creek Utility District
Owner's Office: 847 Dominion, Katy, TX 77450; ph. 281-578-7272, fax 281-578-1419
Project (the Work): Furnish, deliver and install service-rated automatic transfer switch with pad, weatherheads, ducts, wiring, conduits, etc. at Galleon Oaks Water Plant, including demolition, removals, etc., all as further described in the Contract Documents.
Project location: 1609 Galleon Oaks, Katy, TX 77450
Project Officer: Len Forsyth, President

Similar Work (definition): Furnishing, delivering and installing automatic transfer switches for back-up or emergency power equipment serving water or sanitary sewer utility facilities

* * * * * * * * * * * *

The undersigned Bidder certifies all the following, under oath:

A. GENERAL

Full Legal Name of Bidder: Highlights of Houston, Inc. dba Highlights Electrical

Bidder is a *(check one)*: ( ) Partnership ( ) Joint Venture (X) Corporation
( ) LLC ( ) Other:_____

Address: 7510 Langtry St, Houston, TX 77040

Phone: 713-266-6464 Fax: 713-690-9922 Email: bids@hohi.net

Texas Vendor Identification No.:

Federal Tax Identification No.: 76-0193634

B. ORGANIZATIONAL BACKGROUND

1. If the Bidder is a PARTNERSHIP or JOINT VENTURE

   a. Date of organization:

   b. State whether partnership is general or limited:

   c. List all general partners and any limited partners owning 10% or more:
   Name Address Phone % owned

2. If Bidder is a CORPORATION or LLC

   a. Date of incorporation or formation: 8/13/1986

   b. State of incorporation or formation: Texas

   c. Charter/permit number: 1007415

   d. Principal place(s) of business: 7510 Langtry St, Houston, TX 77040

   e. Other state(s) in which firm is authorized to do business: N/A

   f. Officers

      President: M.B. Daniel

      Vice President(s): Clyde Bryan

      Secretary:

      Treasurer:

      Managing Member (LLC):

      Other:

   g. List all persons and entities owning 10% or more of the firm:

Name	*Address*	*Telephone*	*% owned*
M.B. Daniel	7510 Langtry St, 77040	713-266-6464	100

3. If the Bidder is *other than a partnership, LLC or corporation*:

   a. Describe the organization:

   b. List all principals of the organization:

Name	*Address*	*Telephone*	*Title*

   c. Date, state and manner of the organization's formation:

4. How long has the Bidder done business under its present name and at its present address?
   HOHI has done business under our present name since 1986 and at our present address for the past eight months.
   a. Under what other or former names and addresses has the Bidder operated in the past five years? N/A

Name	*Address*	*Years*
Highlights Electrical	4544 S. Pinemont, Ste 208 Houston, TX 77041	36

Note

5. Has the Bidder ever defaulted, declared bankruptcy, or undergone reorganization procedures?
   _X_ Yes _____ No
   If "yes", attach details: list of creditors, amounts owed each, amounts repaid, resolution of proceedings, etc.
   ****Filed Chapter 11 in 2002, details available upon request**

6. Has a predecessor of the Bidder defaulted, declared bankruptcy, or undergone reorganization procedures?
   _____ Yes _X_ No
   If "yes", attach details, as above.

7. Does the Bidder presently have outstanding claims pending against it?
   _____ Yes _X_ No
   If "yes", attach details, as above.

8. Has the Bidder been involved in litigation within the past five years, or is it currently involved in litigation?
   _____ Yes _X_ No
   If "yes", attach details, as above.

9. Has Bidder ever changed its name, changed its form of organization or merged?
   _____ Yes _X_ No
   If "yes," attach a detailed description of any name changes, changes in entity form or mergers, including documentary proof that any surviving entity succeeded to all liabilities of the pre-existing entities.

10. Has the Bidder ever failed to complete a contract, forfeited a bid bond/proposal guaranty, had liquidated damages withheld from its total compensation due on a contract (in excess of 5% of total contract payments), or refused to enter into contract for work awarded to it?
    _____ Yes _X_ No
    If "yes", attach details: (a) name of project, (b) contract amount, (c) type of work, (d) name and addresses of: (i) project engineer, (ii) contractor, and (iii) owner, (e) when, (f) where, and (g) why.

11. Has an officer or principal of the Bidder ever engaged in any of the activities or had claims

against it, him or her as described in this Part B?

_____Yes _X_No

If "yes", attach details, as above.

No experience shown

C. SIMILAR WORK; CURRENT WORK (Note:"similar work" is defined above.)

1. How many years experience in "similar work" (furnishing, delivering and installing smart water meter systems with 100 or more Internet-linked meters) does the Bidder have?

   a. As a general contractor: _____ years

   b. As a subcontractor: _____ years

2. List all projects for "similar work" that Bidder contracted-for or commenced on or after July 1, 2018 (whether completed or not) and provide the indicated information:

Owner of utility facility	Type of facility	Contact person	Phone
Metropolitan Transit Authority	Transit	Mike Mitchell	713-682-3377
University of Houston - Downtown	School Campus	Kris Zimmerman	713-221-8030
Schumacher	Plant	Mindy Birnbaum	281-507-7224

Apparently no projects for "similar work" wihich is defined as: "Furnishing, delivering and installing automatic transfer switches for back-up or ***emergency power equipment serving water or sanitary sewer utility facilities.***"

D. INSURANCE AND BONDING

1. Bidder's Insurance Agent

   Agent's Name (person): Michael Inman

   Name of Agency (company): Brady, Chapman, Holland & Associates, Inc.

   Address: 10055 West Gulf Bank, Houston, TX 77040

   Phone: 713-688-1500

2. Has the Bidder provided a copy of the Insurance Specifications (BID-301) for the Project to the above-named agent?

   _X_ Yes _____ No

3. Has the Bidder consulted with the above-named agent regarding the specific criteria in those Insurance Specifications?

   _X_ Yes _____ No

4. Indicate below whether the Bidder has determined if Bidder now has (or can get) insurance that meets the following criteria, including each item mentioned:

   a. Types of Policies and Minimum Limits. Bidder's insurance portfolio includes each type of policy required by the Insurance Specifications, and each policy has at least the minimum limits prescribed by the Insurance Specifications.

   _X_ Bidder has now* ____ Bidder can get*

   b. Licensing of Insurance Companies. Each of Bidder's insurance policies is issued by an insurance company that is licensed and admitted to do business in the State of Texas (*Exception*: A separate pollution policy may be issued by a "surplus lines" carrier.).

   _X_ Bidder has now* ____ Bidder can get*

   c. Commercial General Liability. Bidder's CGL policy is an ISO standard policy form on file with the Texas Department of Insurance and frequently-used in Texas, and it extends to and covers the following, either in the base form or by endorsement: (i) coverage for premises, operations, explosion, collapse and underground hazards; (ii) contractor's protective coverage for Insured's liability arising out of the hire of subcontractors; (iii) aggregate limits of insurance that apply "per project," using either ISO endorsement form CG25031185 or substantially-equivalent endorsement or policy language; (iv) contractual liability coverage, which supports indemnity obligations undertaken by the Insured for torts and tort-like claims; (v) coverage for bodily injury, death, property damage, personal injury and advertising liability; (vi) coverage for products and completed operations; and (vii) other coverages typically provided in ISO standard general liability forms.

   _X_ Bidder has now* ____ Bidder can get*

   d. Auto Liability. Bidder's auto policy is a standard policy form on file with the Texas Department of Insurance and frequently-used in Texas.

   _X_ Bidder has now* ____ Bidder can get*

   e. Pollution Liability. [*Not required for this Project*]

   f. Excess Liability. Bidder's excess liability policy is: (i) written on an excess basis and provides coverage in excess over--and no less broad than--the underlying policies (the CGL policy and auto policy but not the pollution policy); (ii) has the same inception and expiration dates as the underlying policies; (iii) provides that excess coverage will "drop down" for exhausted aggregate limits of underlying policies; and (iv) contains a "follow form" statement.

   _X_ Bidder has now* ____ Bidder can get*

   g. Additional Insured. Either by ISO endorsement form no. CG20261185 or by substantially-equivalent endorsement (or policy language), both the Owner and the Engineer will be additional insureds on each policy, with coverage for

ongoing operations as well as products and completed operations. *Exceptions*: (i) does not apply to WC/EL or professional E&O policies, (ii) may exclude coverage for risks typically covered by engineering E&O policies.

__X__Bidder has now* ____Bidder can get*

h. Waiver of Subrogation. Either by endorsement or policy language in each policy, waiver of subrogation applies in favor of Owner and Engineer.

__X__Bidder has now* ____Bidder can get*

i. Primary Coverage. Either by endorsement or policy language in each liability policy, coverage for additional insureds is primary and non-contributory (i.e., no contribution from any other insurance of additional insureds).

__X__Bidder has now* ____Bidder can get*

j. Notice of Cancellation, Reduction, Non-Renewal. Either by endorsement or policy language in each policy, each certificate holder will be notified in writing at least 30 days prior to cancellation of or reduction in any coverage, or intent not to renew any coverage. The certificate holder will be named within each policy or an endorsement to the policy, and the policy or endorsement or a law, including a rule, of the State of Texas requires notice to be provided.

__X__Bidder has now* ____Bidder can get*

*If, for any item listed above, Bidder does not how have that item and cannot get it, attach a description of the item and: (i) include an explanation of why Bidder cannot get the item, and (ii) ***notify the Project Officer in writing as soon as possible (before the deadline for delivery of bids)*** so that the Project Officer can consider issuing an addendum to address that item.

5. Bidder's Surety (company that will sign bid, performance, payment bonds, etc.)

Name of Surety Company: SureTec Insurance Company

Authorized to issue surety bonds in Texas? __X__Yes ____No

Maximum amount of bond available to Bidder: $__1,000,000__

Name of Surety Company's agent (person): Scott D. Chapman

Name of Agency (company): USI Insurance Services, LLC

Agency Address: 25025 N. I-45 Freeway, Ste 525, The Woodlands, TX 77380

Agency Phone: 832-702-8350

E. CERTIFICATION. The Bidder certifies, under oath, that all information contained in or submitted with this Statement is current, correct, and complete. Any person, depository, agency, or other entity named in the Statement or attachments is authorized to supply Owner or its representative with any information missing from or necessary to verify information described in this Statement.

Irregularity in name of bidder.

M.B. Daniel
(print or type bidder's full legal name)

By: *(authorized signature)* _____,

Name: M.B. Daneil, Title: President.

Date: 8/4/2020.

STATE OF TEXAS §

COUNTY OF Harris §

SWORN TO AND SUBSCRIBED before me on (*date*) 8/4/2020

(SEAL)

_____
Notary Public

My Commission Expires:

9-5-2022

MELISSA ROSE BUCHANAN
My Notary ID # 126460756
Expires September 5, 2022

Irregular bid bond form.

Irregularity in name of Principal

BID BOND

KNOW ALL BY THESE PRESENTS, That we, **Highlights Electrical**

of **Houston, TX**

(hereinafter called the Principal), as Principal, and

SureTec Insurance Company (hereinafter called the Surety),

as Surety, are held and firmly bound unto **Mason Creek Utility District**

(hereinafter called the Obligee) in the penal sum of **Five Percent of the Greatest Amount Bid**

Dollars ($ **5% G.A.B.**)

for the payment of which the Principal and the Surety bind themselves, their heirs, executors, administrators, successors and assigns, jointly and severally, firmly by these presents.

THE CONDITION OF THIS OBLIGATION IS SUCH, That WHEREAS, the Principal has submitted or is about to submit a proposal to the Obligee on a contract for

Galleon Oaks Water Plant Electrical Improvements

NOW, THEREFORE, If the said Contract be timely awarded to the Principal and the Principal shall, within such time as may be specified, enter into the Contract in writing, and give bond, if bond is required, with surety acceptable to the Obligee for the faithful performance of the said Contract, then this obligation shall be void; otherwise to remain in full force and effect.

Signed and sealed this **5th** day of **August** , **2020** .

Witness

Highlights Electrical

Principal

By: Pres

Title

SureTec Insurance Company

By

Scott D. Chapman, Attorney-in-Fact

Irregularity in name of principal

POA #: 4221830

SureTec Insurance Company

LIMITED POWER OF ATTORNEY

Know All Men by These Presents, That SURETEC INSURANCE COMPANY (the "Company"), a corporation duly organized and existing under the laws of the State of Texas, and having its principal office in Houston, Harris County, Texas, does by these presents make, constitute and appoint

Elaine Lewis, Rosalyn D. Hassell, Scott D. Chapman, Kevin McQuain
Jeanne M. Buchan, Cheryl R. Colson, Timothy J. Maley, Misty Witt

its true and lawful Attorney-in-fact, with full power and authority hereby conferred in its name, place and stead, to execute, acknowledge and deliver any and all bonds, recognizances, undertakings or other instruments or contracts of suretyship to include waivers to the conditions of contracts and consents of surety for, providing the bond penalty does not exceed

Five Million and 00/100 Dollars ($5,000,000.00)

and to bind the Company thereby as fully and to the same extent as if such bond were signed by the CEO, sealed with the corporate seal of the Company and duly attested by its Secretary, hereby ratifying and confirming all that the said Attorney-in-Fact may do in the premises. Said appointment is made under and by authority of the following resolutions of the Board of Directors of the SureTec Insurance Company:

Be it Resolved, that the President, any Vice-President, any Assistant Vice-President, any Secretary or any Assistant Secretary shall be and is hereby vested with full power and authority to appoint any one or more suitable persons as Attorney(s)-in-Fact to represent and act for and on behalf of the Company subject to the following provisions:

Attorney-in-Fact may be given full power and authority for and in the name of and of behalf of the Company, to execute, acknowledge and deliver, any and all bonds, recognizances, contracts, agreements or indemnity and other conditional or obligatory undertakings and any and all notices and documents canceling or terminating the Company's liability thereunder, and any such instruments so executed by any such Attorney-in-Fact shall be binding upon the Company as if signed by the President and sealed and effected by the Corporate Secretary.

Be it Resolved, that the signature of any authorized officer and seal of the Company heretofore or hereafter affixed to any power of attorney or any certificate relating thereto by facsimile, and any power of attorney or certificate bearing facsimile signature or facsimile seal shall be valid and binding upon the Company with respect to any bond or undertaking to which it is attached. *(Adopted at a meeting held on 20th of April, 1999.)*

In Witness Whereof, SURETEC INSURANCE COMPANY has caused these presents to be signed by its CEO, and its corporate seal to be hereto affixed this 16th day of August, A.D. 2019.

SURETEC INSURANCE COMPANY

By: _____
John Knox Jr., CEO

State of Texas ss:
County of Harris

On this 16th day of August, A.D. 2019 before me personally came John Knox Jr., to me known, who, being by me duly sworn, did depose and say, that he resides in Houston, Texas, that he is CEO of SURETEC INSURANCE COMPANY, the company described in and which executed the above instrument; that he knows the seal of said Company; that the seal affixed to said instrument is such corporate seal; that it was so affixed by order of the Board of Directors of said Company; and that he signed his name thereto by like order.

JACQUELYN GREENLEAF
Notary Public, State of Texas
Comm. Expires 05-18-2021
Notary ID 126903029

_____
Jacquelyn Greenleaf, Notary Public
My commission expires May 18, 2021

I, M. Brent Beaty, Assistant Secretary of SURETEC INSURANCE COMPANY, do hereby certify that the above and foregoing is a true and correct copy of a Power of Attorney, executed by said Company, which is still in full force and effect; and furthermore, the resolutions of the Board of Directors, set out in the Power of Attorney are in full force and effect.

Given under my hand and the seal of said Company at Houston, Texas this 5th day of August, 2020, A.D.

_____
M. Brent Beaty, Assistant Secretary

Any instrument issued in excess of the penalty stated above is totally void and without any validity.
For verification of the authority of this power you may call (713) 812-0800 any business day between 8:30 am and 5:00 pm CST.

SureTec Insurance Company

THIS BOND RIDER CONTAINS IMPORTANT COVERAGE INFORMATION

Statutory Complaint Notice

To obtain information or make a complaint: You may call the Surety's toll free telephone number for information or to make a complaint at: 1-866-732-0099. You may also write to the Surety at:

SureTec Insurance Company
9737 Great Hills Trail, Suite 320
Austin, Tx 78759

You may contact the Texas Department of Insurance to obtain information on companies, coverage, rights or complaints at 1-800-252-3439. You may write the Texas Department of Insurance at:

PO Box 149104
Austin, TX 78714-9104
Fax#: 512-475-1771
Web: http://www.tdi.state.tx.us
Email: ConsumerProtection@tdi.state.tx.us

PREMIUM OR CLAIM DISPUTES: Should you have a dispute concerning your premium or about a claim, you should contact the Surety first. If the dispute is not resolved, you may contact the Texas Department of Insurance.

Terrorism Risks Exclusion

The Bond to which this Rider is attached does not provide coverage for, and the surety shall not be liable for, losses caused by acts of terrorism, riot, civil insurrection, or acts of war.

Extraneous document added to bid package

Powering Business Worldwide

Detail Bill of Material

Project Name:	Mason Creek UD Galleon Oaks Water Plant	**Negotiation No:**	D24I0803X0K3
General Order No:		**Alternate No:**	0001

Item No.	Qty	Product	Description
	1	Automatic Transfer Switches	

Product Family: Service Entrance Contactor
Switch Type: Automatic Contactor 40A thru 1600A
480/277v, 60hz, 3 Phase, 4 Wire, 3 poles
Transition Mode: Open
Controller Type: ATC-300+
Continuous Current: 1200 Amps
Withstand: 65kA
Normal Source Terminals: (4) 500-1000 CU/AL
Emergency Source Terminals: (4) 1/0-750 CU/AL
Load Side Terminals: (4) 1/0-750 CU/AL
Neutral Terminals: (12) 4/0-500 CU/AL

Catalog No ATC3C5C31200XRU

Qty	List of Materials
1	ATC3C5 3 Poles 1200 Amps
1	Enclosure - Type-3R
1	1a. Time Delay Normal to Emergency Adj. 0-1800 sec
1	2a. Time Delay Engine Start Adj. 0-120 sec
1	3a. Time Delay Emergency to Normal Adj. 0-1800 sec
1	4a. Time Delay Engine Cool-off Adj. 0-1800 sec
1	5h. Emergency (S2) Sensing Phase Reversal
1	5j. Emergency (S2) Sensing Under Voltage/Under Freq
1	5k. Emergency (S2) Sensing Over Voltage/Over Freq
1	5l. Emergency (S2) Sensing Voltage Unbalance
1	6b. Test Pushbutton
1	7a. Time Delay Engine Fail Adj. 0-6 sec
1	8c. Time Delay Bypass Emergency to Normal
1	8d. Time Delay Bypass Normal to Emergency
1	12c. LED Indicator Normal Position
1	12d. LED Indicator Emergency Position
1	12g. LED Indicator Normal Source Present
1	12h. LED Indicator Emergency Source Present
1	12l. Normal Digitrip-310+ LSIG 800 Amps
1	14l. Normal (S1) Source Present (2 Form C)
1	14m. Emergency (S2) Source Present (2 Form C)
1	15e. Normal (S1) Position Indication (1 Form C Micro Switch Outputs)
1	15f. Emergency (S2) Position Indication (1 Form C Micro Switch Outputs)
1	15l. Normal (S1) Breaker Position Indication (2 Form C)
1	17h. Padlockable Handle Lock Hasp
1	17n. Normal (S1) Breaker (RG 1600A) with 100% load rating
1	22. Ground Bar
1	23k. Auto Plant Exerciser 1/7/14/28 Day
1	26d. Go To Source 2
1	26h. Normal (S1) Sensing Phase Reversal

Powering Business Worldwide

Detail Bill of Material

Project Name:	Mason Creek UD Galleon Oaks Water Plant	**Negotiation No:**	D24I0803X0K3
General Order No:		**Alternate No:**	0001

Qty	List of Materials
1	26j. Normal (S1) Sensing Under-voltage/Under-frequency
1	26k. Normal (S1) Sensing Over-voltage/Over-frequency
1	26l. Normal (S1) Sensing Voltage Unbalance
1	32d. In-Phase Transition defaults to Time Delay Neutral
1	35a. Pre-transfer Signal Contacts (1 Form C)
1	36. Emergency Load Shed from Remote
1	37b. UL 1008 Rated as Suitable for Service Entrance w/Ground Fault
1	42. IBC/CBC Seismic Qualified
1	48d1. Ethernet Communication
1	48f. MODBUS Communication
1	49c. Multi-Tap Transformer
1	80a. Emergency (S2) Inhibit Contact
1	81a. General Alarm Indication Contact

Apparently adds terms and conditions to those advertised by the District, including possible price increase and indefinite time extension(s).

Eaton Selling Policy 25-000 applies.

All orders must be released for manufacture within 90 days of date of order entry. If approval drawings are required, drawings must be returned approved for release within 60 days of mailing. If drawings are not returned accordingly, and/or if shipment is delayed for any reason, the price of the order will increase by 1.0% per month or fraction thereof for the time the shipment is delayed.

Seller shall not be responsible for any failure to perform, or delay in performance of, its obligations resulting from the COVID-19 pandemic or any future epidemic, and Buyer shall not be entitled to any damages resulting thereof.

Extraneous plan sheet added to the documents advertised by the District.

UL 1008 SUITABLE FOR USE AS SERVICE EQUIPMENT

CONTINUOUS LOAD CURRENT	AMPS	MCCB	(NUMBER OF CONDUCTORS) AWG WIRE / TORQUE FT-LBS		WCR SYM RMS AMPS @ 480V (KA)	BREAKER AIC RATING (KAIC)
			S1 (BREAKER)	S2 & LOAD		
100%	1000	RGHx16	(4) 500-1000 / 32	(4) 1/0-750 / 32	65	65
100%	1200	RGHx16	(4) 500-1000 / 32	(4) 1/0-750 / 32	65	65

MCCB: Eaton Breaker with Digitrip 310+ electronic trip unit

MOUNTING RECOMMENDED FOR ALL APPLICATIONS:
USE 6, 1/2-13 UNC GRADE 5 OR BETTER HEX HEAD BOLTS AND WASHERS:
1 ON EACH INSIDE CORNER, 2 ON 3R EXTENSION.
THESE BOLTS ARE TO BE TORQUED TO 50 FT. LBS. (68 NM).

NOTES:
1 APPROXIMATE SHIPPING WEIGHT = 1450 LBS [658 KG]
2 DIMENSIONS SHOWN IN INCHES [MILLIMETERS]
3 CONTROLS PROVIDED BASED ON CUSTOMER ORDER INFORMATION.
4 TRANSFORMER INCLUDED.
5 FOR SWITCHED NEUTRAL APPLICATIONS, CONNECT TO TERMINALS MARKED 'NN', 'EN', AND 'TN'. NEUTRAL ASSEMBLY IS NOT PROVIDED.
FOR 3 PHASE 3 WIRE SYSTEMS NEUTRAL ASSEMBLY IS NOT PROVIDED.
6 NEUTRAL TO GROUND BOND REQUIRED FOR SERVICE ENTRANCE APPLICATIONS HARDWARE SHIPS LOOSE.

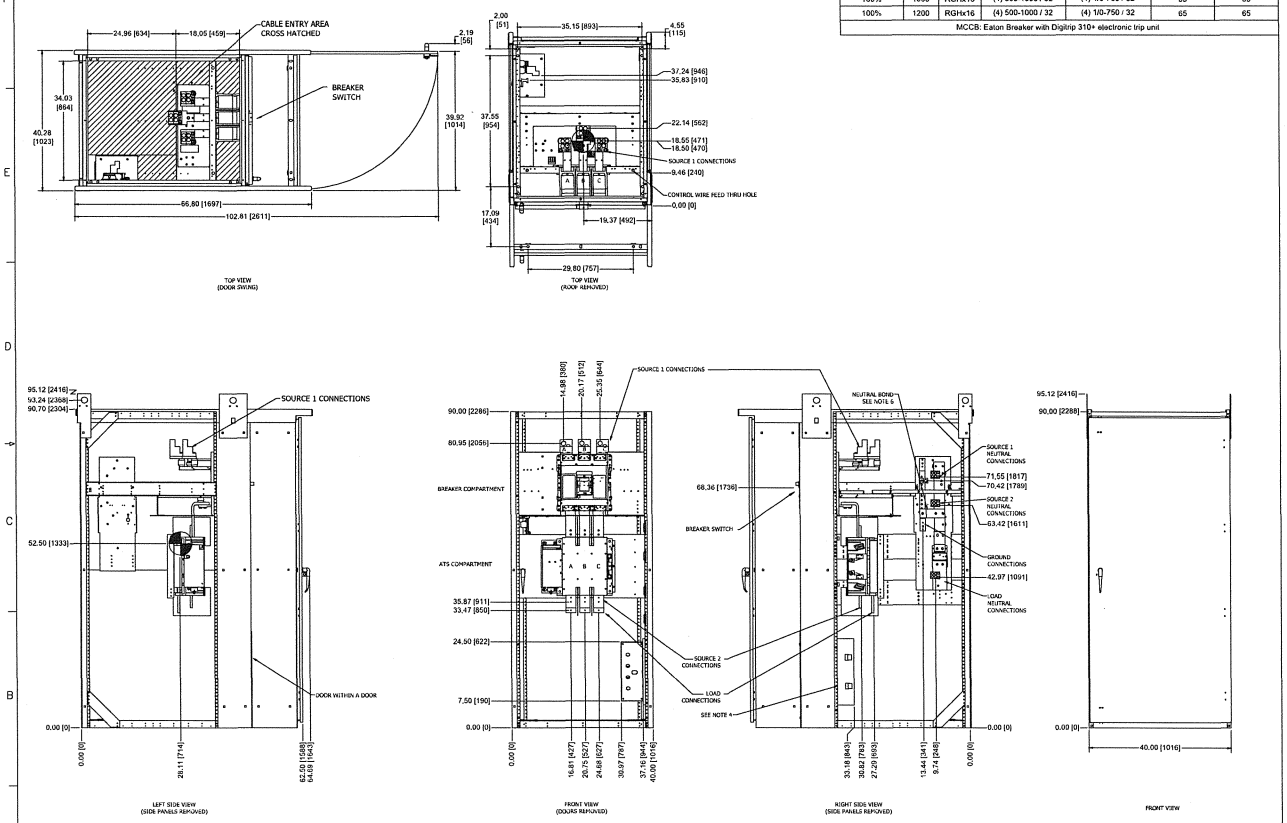

CENTER OF GRAVITY

REVISION	
1	GROUND FAULT REVISION HATES 12/12/2016
2	UPDATED VIEWS, ADDED PHASE MARKINGS & CABLE ENTRY. JILL BALLARD 7/31/2018
3	

THE INFORMATION ON THIS DOCUMENT WAS CREATED BY EATON CORPORATION. IT WAS DISCLOSED IN CONFIDENCE AND IS ONLY TO BE USED FOR THE PURPOSE IN WHICH IT WAS SUPPLIED.

EATON

DFTR JILL BALLARD	DATE 5/13/2016	TITLE FLOOR MOUNT CONTACTOR | NEMA 3R 3P 480V 1000-1200A SERVICE ENTRANCE w/GROUND FAULT	
APPD	DATE		
FEDERAL ID NO. 88725	S.O.	TYPE OPEN TRANSFER	OUTLINE
PRODUCT CODE AT	REVISION 3	DESIGNATION	G.O.
DWG 69C2509 GF	SHEET 1 OF 1		

COEFTBL REV 02

GO/NEG-Alt-Date: D24I0803X0K3-0001-8/3/2020		Job Name: Mason Creek UD Galleon Oaks Water Plant	
Item Number:	Catalog Number: ATC3C5C31200XRU	Designation:	

Extraneous plan sheet added to the documents advertised by the District.

UL 1008 SUITABLE FOR USE AS SERVICE EQUIPMENT						
CONTINUOUS LOAD CURRENT	AMPS	MCCB	(NUMBER OF CONDUCTORS) AWG WIRE / TORQUE FT-LBS		WCR SYM RMS AMPS @ 480V (KA)	BREAKER AIC RATING (KAIC)
			S1 (BREAKER)	S2 & LOAD		
100%	1000	RGHx16	(4) 500-1000 / 32	(4) 1/0-750 / 32	65	65
100%	1200	RGHx16	(4) 500-1000 / 32	(4) 1/0-750 / 32	65	65
MCCB: Eaton Breaker with Digitrip 310+ electronic trip unit						

MOUNTING RECOMMENDED FOR ALL APPLICATIONS:
USE 6, 1/2-13 UNC GRADE 5 OR BETTER HEX HEAD BOLTS AND WASHERS:
1 ON EACH INSIDE CORNER, 2 ON 3R EXTENSION.
THESE BOLTS ARE TO BE TORQUED TO 50 FT. LBS. (68 NM).

NOTES:
1 APPROXIMATE SHIPPING WEIGHT = 1450 LBS [658 KG]
2 DIMENSIONS SHOWN IN INCHES [MILLIMETERS]
3 CONTROLS PROVIDED BASED ON CUSTOMER ORDER INFORMATION.
4 TRANSFORMER INCLUDED.
5 FOR SWITCHED NEUTRAL APPLICATIONS, CONNECT TO TERMINALS MARKED 'NN', 'EN', AND 'TN'. NEUTRAL ASSEMBLY IS NOT PROVIDED. FOR 3 PHASE 3 WIRE SYSTEMS NEUTRAL ASSEMBLY IS NOT PROVIDED.
6 NEUTRAL TO GROUND BOND REQUIRED FOR SERVICE ENTRANCE APPLICATIONS HARDWARE SHIPS LOOSE.

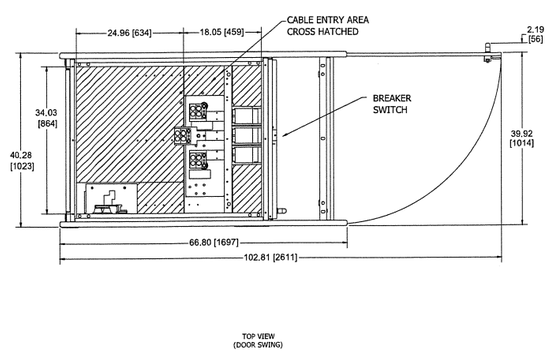

TOP VIEW (DOOR SWING)

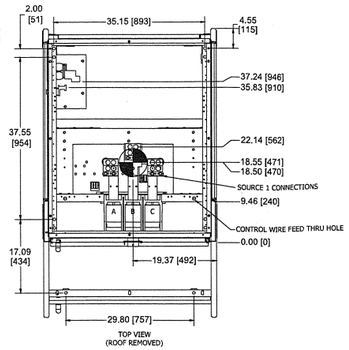

TOP VIEW (ROOF REMOVED)

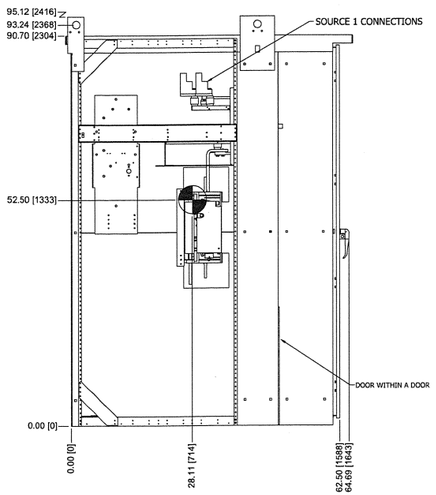

LEFT SIDE VIEW (SIDE PANELS REMOVED)

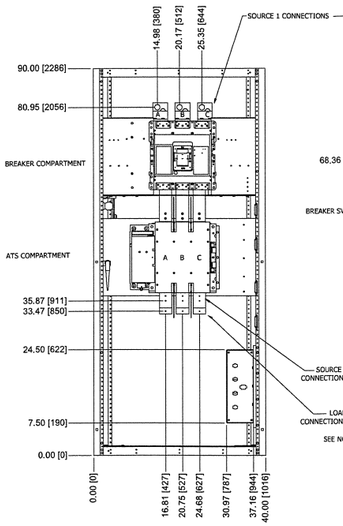

FRONT VIEW (DOORS REMOVED)

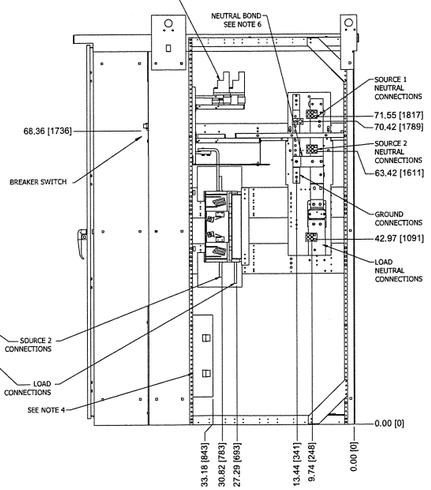

RIGHT SIDE VIEW (SIDE PANELS REMOVED)

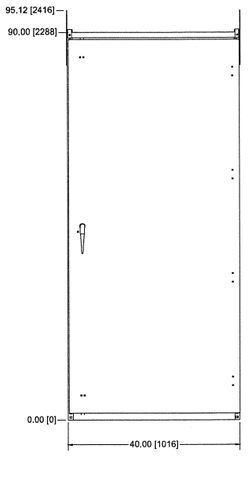

FRONT VIEW

CG CENTER OF GRAVITY

REVISION		
1	2	3
	GROUND FAULT REDESIGN HAYES 12/12/2016	UPDATED VIEWS, ADDED PANELS, MARKINGS & CABLE ENTRY. JILL BALLARD 7/31/2018

	DFTR JILL BALLARD	DATE 5/13/2016	THE INFORMATION ON THIS DOCUMENT WAS CREATED BY EATON CORPORATION. IT WAS DISCLOSED IN CONFIDENCE AND IS ONLY TO BE USED FOR THE PURPOSE IN WHICH IT WAS SUPPLIED. EATON
	APPD	DATE	TITLE FLOOR MOUNT CONTACTOR | NEMA 3R 3P 480V 1000-1200A SERVICE ENTRANCE w/GROUND FAULT
FEDERAL ID NO. 88725	S.O.		TYPE OPEN TRANSFER / OUTLINE
PRODUCT CODE AT	REVISION 3	DESIGNATION	G.O. / DWG 69C2509 GF / SHEET 1 OF 1

COETTBL REV 02

GO/NEG-Alt-Date: D24I0803X0K3-0001-8/3/2020		Job Name: Mason Creek UD Galleon Oaks Water Plant	
Item Number:	Catalog Number: ATC3C5C31200XRU	Designation:	

HIGHLIGHTS ELECTRICAL
7510 Langtry
Houston, TX 77040
713-266-6464
www.highlightselectrical.com

Extraneous proposal added to the documents advertised by the District.

8/5/20

Proposal Number: 2020 - 6953

Mason Creek Utility District
1609 Galleon Oaks Drive
Katy, TX 77450

Scope of Work:

We are pleased to offer for your consideration the following electrical proposal.

Electrical installation per bid package provided

- Project: Galleon Oaks Water Plant Electrical Improvements
- Location: 1609 Galleon Oaks Drive, Katy, TX 77450
- Drawings & Specifications: Baird Gilroy & Dixon
  - Dated: April 2020
  - Project Number: 132-0008

Base Bid Includes

- Electrical installation per drawing; E1, E2, E3, E4, and E5
- Furnish, deliver, and install service-rated automatic transfer switch with pad, weather heads, ducts, wiring, conduits, etc. at Galleon Oaks Water Plant, including demolition, removals, etc., all as further described in the Contract Documents.
- Prevailing wages
- CenterPoint Energy crew fees
- Normal business hours, Monday - Friday

Excludes

- Permits – outside of city limits
- Fire Alarm installation and/or systems components
- Audio Visual installation and/or systems components
- Data installation and/or system components
- Temporary lighting arrangements – use existing
- Temporary power arrangements – use existing

Different from Contract Documents

Standard lead time for gear package is 8 to 16 weeks upon approved submittals.
Monthly billing per schedule of values.

Base Bid per Specifications..... $78,860.00

All questions should be directed to Craig Kersting

Craig Kersting
Senior Estimator
craig@hohi.net

Highlights Electrical
7510 Langtry
Houston, Texas 77040

713-266-6464 Office

All significantly different from the Contract Documents. Note, especially, sentences highlighted in yellow.

Subject to Terms and Conditions

All material is guaranteed to be as specified. All work to be completed in a professional manner according to standard practices. Any alteration or deviation from the above specifications which involve extra costs will be made only upon receipt of an authorized, written change order and will be shown on subsequent invoices as amounts over the original estimate. It is understood that we will not be penalized for delays caused by strikes, accidents or other delays caused by acts of God. Our workers are covered by Workers' Compensation Insurance. Owner agrees to furnish all other appropriate and necessary insurance coverages. The additional terms, conditions, and exclusions outlined on the back of this form shall be considered a part of this proposal.

Note: This proposal may be withdrawn by us if not accepted within 30 days.

Authorized Signature_____

ACCEPTANCE OF PROPOSAL - The above prices, specifications and conditions are satisfactory and are accepted. Highlights Electrical is authorized to perform the work as specified. Payment will be made as specified above.

Signature: _____ **Date of Acceptance:** _____